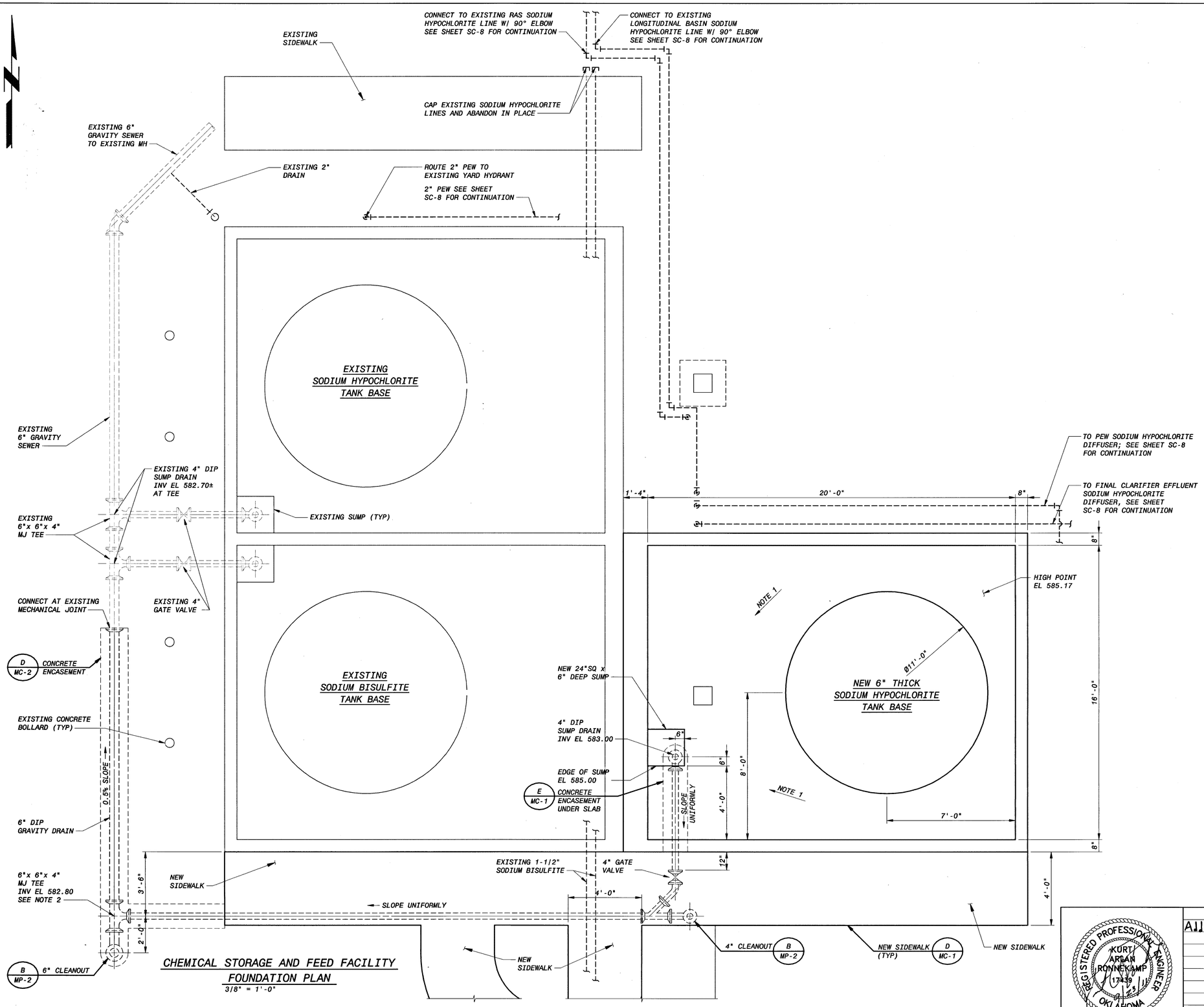

CHEMICAL STORAGE AND FEED FACILITY
FOUNDATION PLAN
3/8" = 1'-0"

NOTES:

1. SLOPE FLOOR 1/8" PER FOOT TOWARDS NEW SUMP.
2. TEE SHALL BE ROTATED AS NECESSARY TO MATCH CONNECTING ELEVATIONS FROM DRAIN TO SEWER.
3. AT LOCATIONS WHERE TWO SODIUM HYPOCHLORITE LINES ARE ADJACENT TO EACH OTHER, LINES SHALL BE ENCASED USING DETAIL A ON SHEET SC-25. AT LOCATIONS WITH SINGLE SODIUM HYPOCHLORITE LINE, DETAIL B ON SHEET SC-25 SHALL BE USED.

2

LOWER BIRD CREEK WWTP EXPANSION
TMUA PROJECT NO. ES 2006-01
CONTRACT 1B

CHEMICAL STORAGE AND FEED FACILITY
CIVIL / STRUCTURAL
FOUNDATION PLAN

CITY OF TULSA, OKLAHOMA
TULSA METROPOLITAN UTILITY AUTHORITY
ENGINEERING SERVICES DEPARTMENT

PLANS AND ESTIMATES PREPARED BY:

BLACK & VEATCH Building a world of difference. Black & Veatch Corporation Kansas City, Missouri

Holloway, Updike and Bollen Consulting Engineers Muskogee · Broken Arrow

DWGATES Engineering Services

REGISTERED PROFESSIONAL ENGINEER KURT ARLAN RONNEKAMP 17439 OKLAHOMA

REVISION	BY	DATE
Addendum No. 2	PSB	1-13-12

PLAN SCALE:	DRAWN	JKS	APPROVED:
	DESIGNED	JMS	
	SURVEY		
PROFILE SCALE:	FIELD MGR.	TDS 10/11	
HORIZONTAL: 1" =	SECT. MGR.		
	PROJ. MGR.	RW 10/3/11	
VERTICAL 1" =	RECOMMENDED: HAS 10/30/11		DIRECTOR
FILE:	DRAWING: CC-2		DATE 10/28/2011
ATLAS PAGE NO:			SHEET 152 OF 261 SHEETS

9-28-11

B&V PROJECT NO. 145120

PLOTTED DATE: ARL15062, 9/19/2011 1:33:52 PM
SAVED DATE: 9/19/2011 2:38:34 PM
CONE1 (B): 145120-3000-C-B8000WAC

F0145120
D145120BV

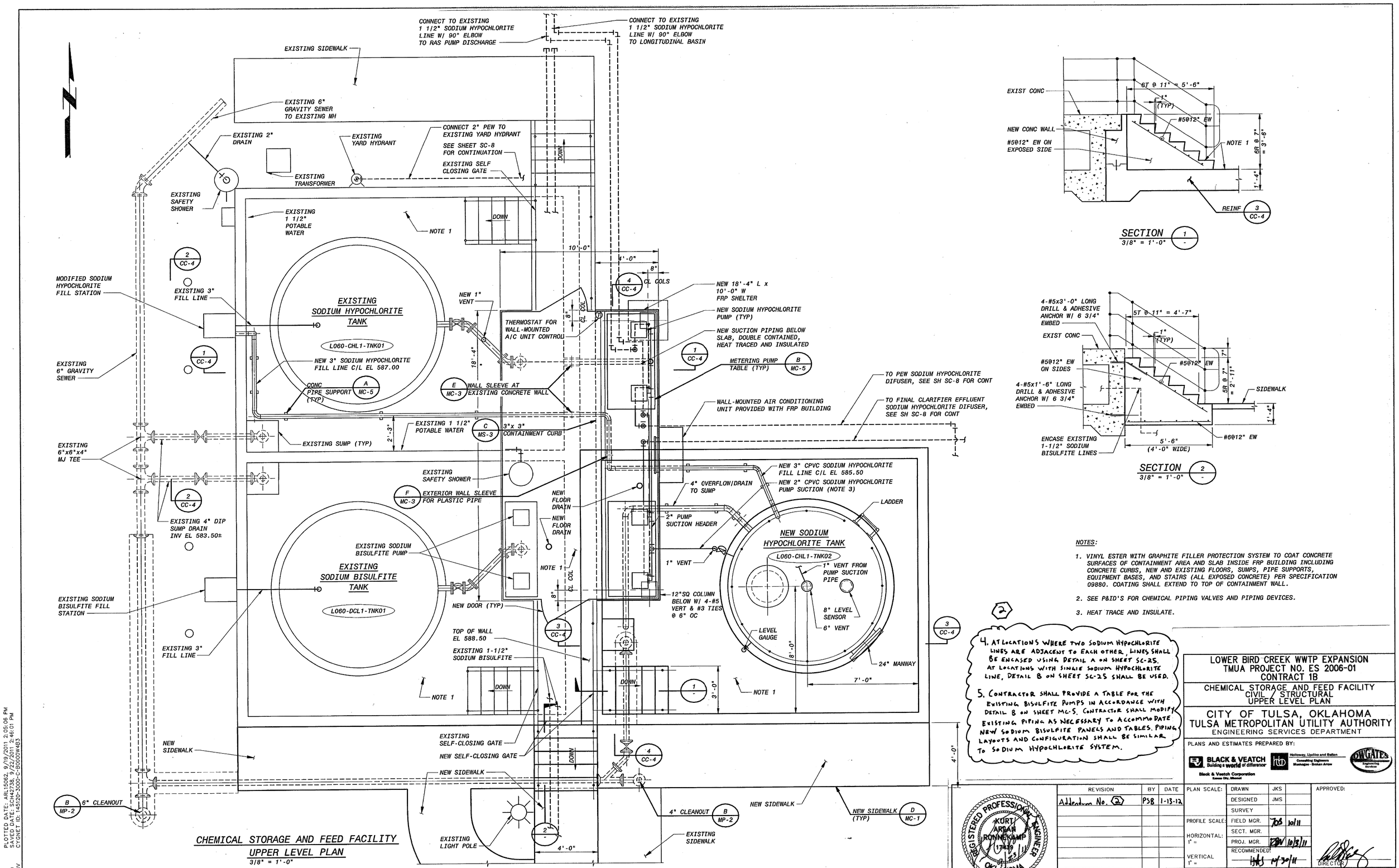

CHEMICAL STORAGE AND FEED FACILITY
UPPER LEVEL PLAN
3/8" = 1'-0"

SECTION 1 / 3/8" = 1'-0"

SECTION 2 / 3/8" = 1'-0"

NOTES:

1. VINYL ESTER WITH GRAPHITE FILLER PROTECTION SYSTEM TO COAT CONCRETE SURFACES OF CONTAINMENT AREA AND SLAB INSIDE FRP BUILDING INCLUDING CONCRETE CURBS, NEW AND EXISTING FLOORS, SUMPS, PIPE SUPPORTS, EQUIPMENT BASES, AND STAIRS (ALL EXPOSED CONCRETE) PER SPECIFICATION 09880. COATING SHALL EXTEND TO TOP OF CONTAINMENT WALL.
2. SEE P&ID'S FOR CHEMICAL PIPING VALVES AND PIPING DEVICES.
3. HEAT TRACE AND INSULATE.

2

4. AT LOCATIONS WHERE TWO SODIUM HYPOCHLORITE LINES ARE ADJACENT TO EACH OTHER, LINES SHALL BE ENCASED USING DETAIL A ON SHEET SC-25. AT LOCATIONS WITH SINGLE SODIUM HYPOCHLORITE LINE, DETAIL B ON SHEET SC-25 SHALL BE USED.

5. CONTRACTOR SHALL PROVIDE A TABLE FOR THE EXISTING BISULFITE PUMPS IN ACCORDANCE WITH DETAIL B ON SHEET MC-5. CONTRACTOR SHALL MODIFY EXISTING PIPING AS NECESSARY TO ACCOMMODATE NEW SODIUM BISULFITE PANELS AND TABLES. PIPING LAYOUTS AND CONFIGURATION SHALL BE SIMILAR TO SODIUM HYPOCHLORITE SYSTEM.

REGISTERED PROFESSIONAL ENGINEER KURT ARMAN RONNEKAMP 17439 OKLAHOMA

REVISION	BY	DATE
Addendum No. 2	PSB	1-13-12

LOWER BIRD CREEK WWTP EXPANSION
TMUA PROJECT NO. ES 2006-01
CONTRACT 1B

CHEMICAL STORAGE AND FEED FACILITY
CIVIL / STRUCTURAL
UPPER LEVEL PLAN

CITY OF TULSA, OKLAHOMA
TULSA METROPOLITAN UTILITY AUTHORITY
ENGINEERING SERVICES DEPARTMENT

PLANS AND ESTIMATES PREPARED BY:
BLACK & VEATCH Building a world of difference. Black & Veatch Corporation Kansas City, Missouri
Holloway, Ujiddiko and Ballan Consulting Engineers Muskogee · Broken Arrow
OWGATES Engineering Services

PLAN SCALE:	DRAWN	JKS		APPROVED:
	DESIGNED	JMS		
	SURVEY			
PROFILE SCALE:	FIELD MGR.	TDS	10/11	
HORIZONTAL: 1" =	SECT. MGR.			
	PROJ. MGR.	DBV	10/13/11	
VERTICAL 1" =	RECOMMENDED:	HHS	11/30/11	DIRECTOR
FILE:	DRAWING: CC-3			DATE 10/28/2011
ATLAS PAGE NO:				SHEET 153 OF 261 SHEETS

9-28-11

B&V PROJECT NO. 145120

PLOTTED DATE: ARL15062, 9/19/2011 2:05:06 PM
SAVED DATE: SCH42738, 9/22/2011 2:46:01 PM
CYGNET ID: 145120-3000-C-B00001463

FD145120
D145120BV

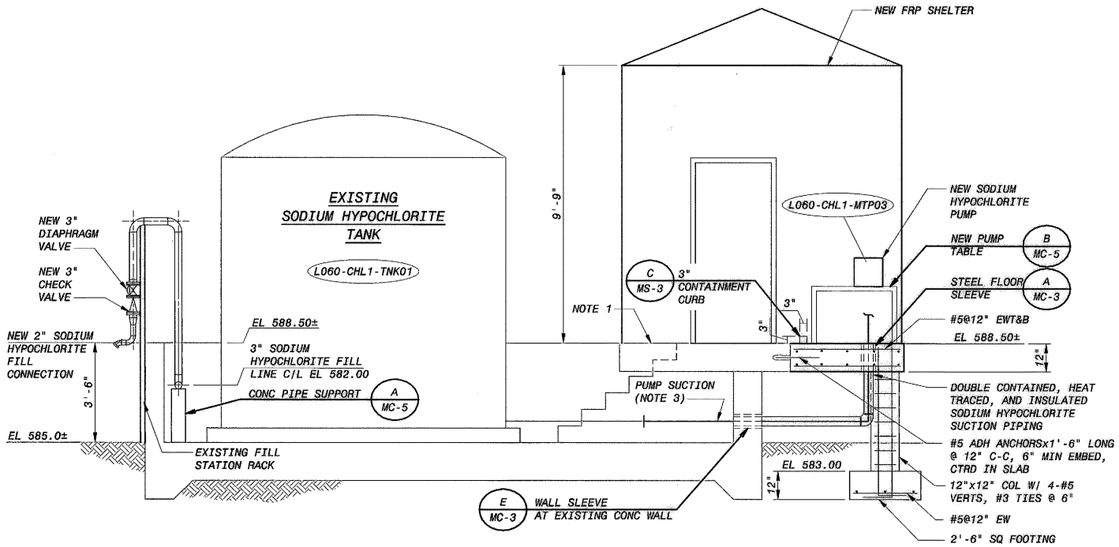

SECTION 1 (CC-3)
3/8" = 1'-0"

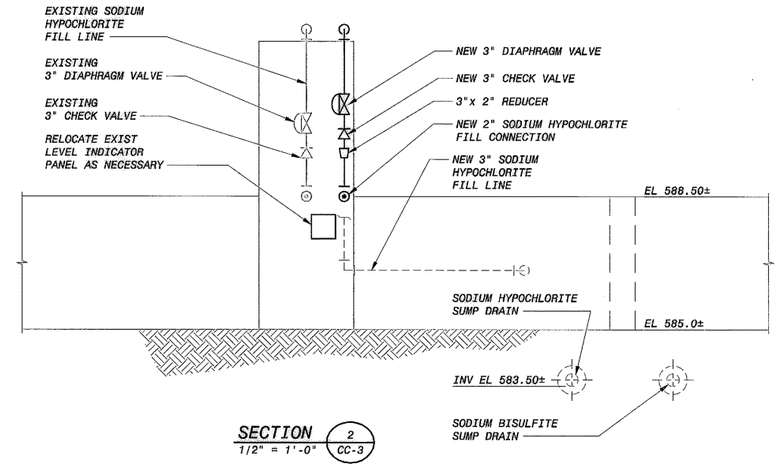

SECTION 2 (CC-3)
1/2" = 1'-0"

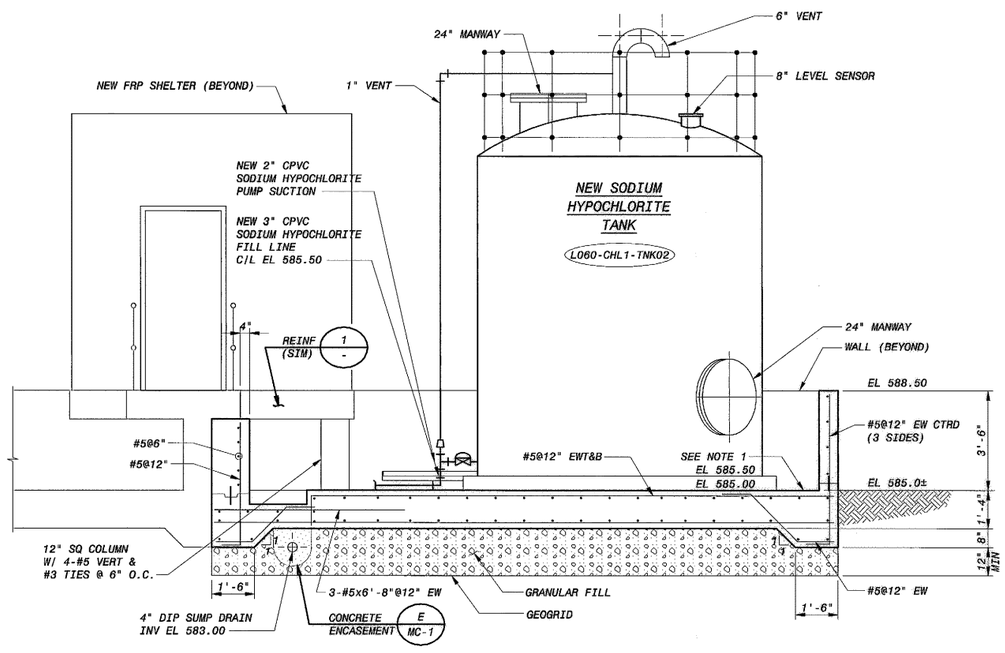

SECTION 3 (CC-3)
3/8" = 1'-0"

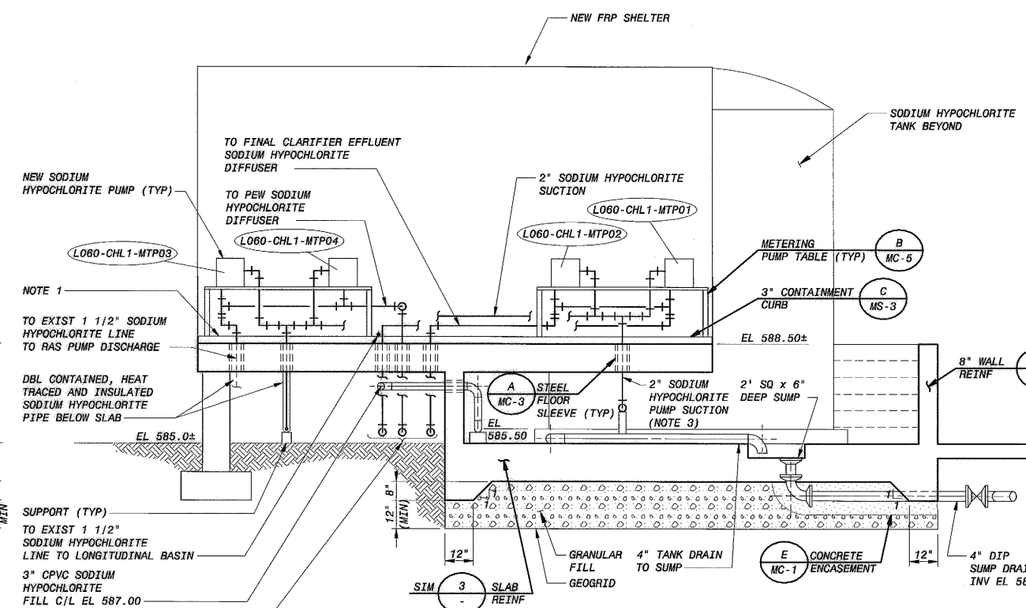

SECTION 4 (CC-3)
3/8" = 1'-0"

NOTES:

1. VINYL ESTER WITH GRAPHITE FILLER PROTECTION SYSTEM TO COAT CONCRETE SURFACES OF CONTAINMENT AREA AND SLAB INSIDE FRP BUILDING INCLUDING CONCRETE CURBS, NEW AND EXISTING FLOORS, SUMPS, PIPE SUPPORTS, EQUIPMENT BASES, AND STAIRS (ALL EXPOSED CONCRETE) PER SPECIFICATION 09880. COATING SHALL EXTEND TO TOP OF CONTAINMENT WALL.
2. SEE P&ID'S FOR CHEMICAL PIPING SIZES, VALVES, AND PIPING DEVICES.
3. HEAT TRACE AND INSULATE.
4. DOUBLE CONTAINED, HEAT TRACED, AND INSULATED.

LOWER BIRD CREEK WWTP EXPANSION
TMUA PROJECT NO. ES 2006-01
CONTRACT 1B

CHEMICAL STORAGE AND FEED FACILITY
CIVIL / STRUCTURAL
SECTIONS

CITY OF TULSA, OKLAHOMA
TULSA METROPOLITAN UTILITY AUTHORITY
ENGINEERING SERVICES DEPARTMENT

PLANS AND ESTIMATES PREPARED BY:

BLACK & VEATCH Building a world of difference. Black & Veatch Corporation Kansas City, Missouri

Holloway, Updike and Bellen Consulting Engineers Muskogee · Broken Arrow

DWGATES Engineering Services

REGISTERED PROFESSIONAL ENGINEER KURT ARLAN RONNEKAMP 17439 OKLAHOMA

REVISION	BY	DATE

PLAN SCALE:	DRAWN	JKS	APPROVED:
	DESIGNED	JMS	
	SURVEY		
PROFILE SCALE:	FIELD MGR.	10/11	
HORIZONTAL: 1" =	SECT. MGR.		
	PROJ. MGR.	10/5/11	
VERTICAL 1" =	RECOMMENDED:	10/20/11	DIRECTOR
FILE:	DRAWING: CC-4		DATE 10/28/2011
ATLAS PAGE NO:			SHEET 154 OF 261 SHEETS

9-28-11

B&V PROJECT NO. 145120

PLOTTED DATE: JOR47995, 4/24/2011 1:16:24 PM
SAVED DATE: SCH42735, 9/15/2011 10:30:00 AM
CYCNET ID: 145120-3000-C-B000W4B4

FD145120
D145120BV

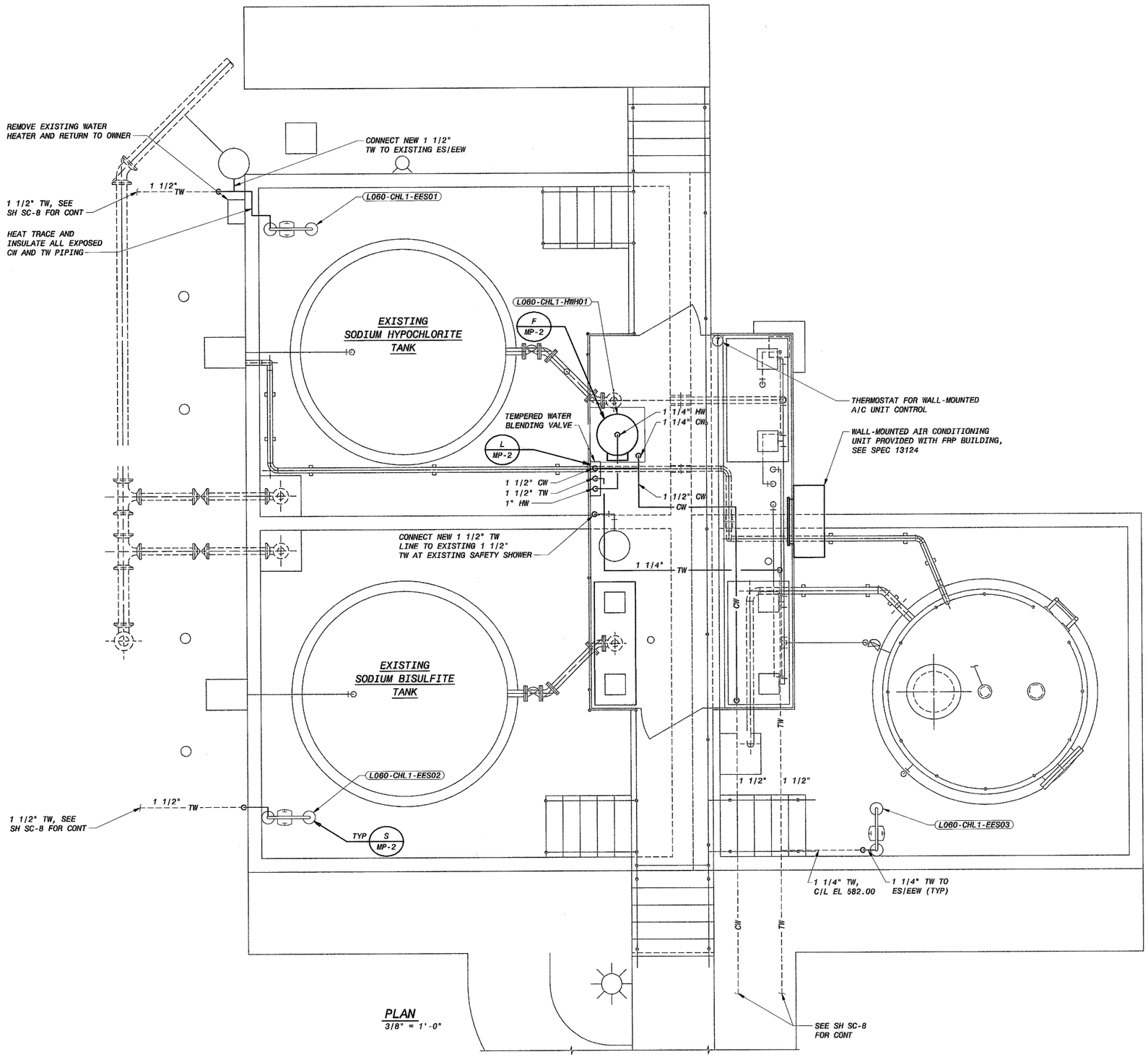

PLAN
3/8" = 1'-0"

N

LOWER BIRD CREEK WWTP EXPANSION
TMUA PROJECT NO. ES 2006-01
CONTRACT 1B

CHEMICAL STORAGE AND FEED FACILITY
PLUMBING/HVAC
PLAN

CITY OF TULSA, OKLAHOMA
TULSA METROPOLITAN UTILITY AUTHORITY
ENGINEERING SERVICES DEPARTMENT

PLANS AND ESTIMATES PREPARED BY:

BLACK & VEATCH Building a world of difference
Black & Veatch Corporation Kansas City, Missouri
Holloway, Updike and Bellan Consulting Engineers Muskogee · Broken Arrow
DWGATES Engineering Services

REGISTERED PROFESSIONAL ENGINEER DAVID WILLIAM NELSON 17980 9/20/11 OKLAHOMA

REVISION	BY	DATE

PLAN SCALE: 3/8" = 1'-0"	DRAWN	BDL	APPROVED:
	DESIGNED	TRD	
	SURVEY		
PROFILE SCALE:	FIELD MGR.	TOB 10/11	
HORIZONTAL: 1" =	SECT. MGR.		
	PROJ. MGR.	RBV 10/28/11	
VERTICAL 1" =	RECOMMENDED: HAS 10/30/11		DIRECTOR
FILE: CP-01.DWG	DRAWING: CP-1		DATE 10/28/2011
ATLAS PAGE NO:			SHEET 155 OF 261 SHEETS

9-28-11 B&V PROJECT NO. 145120

PLOTTED DATE: 9/22/2011 5:41:35 AM Batch Plot
SAVED DATE: LOV/67/44, 9/20/2011 10:16:09 AM
CYGNET ID: 145120-3000-PB-B0000W9FF

FD145120
D145120BV

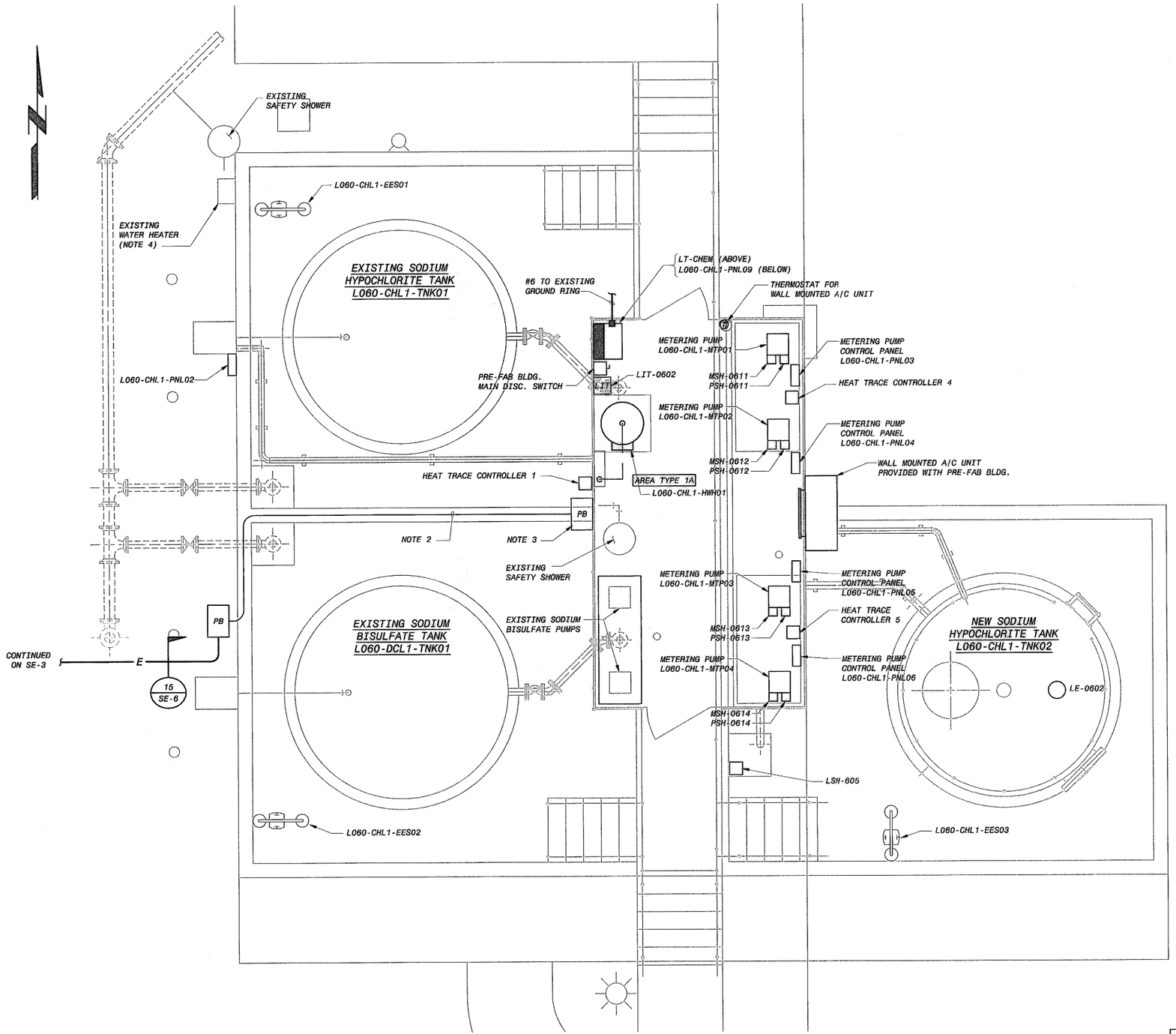

CHEMICAL STORAGE AND FEED FACILITY
UPPER LEVEL POWER AND LIGHTING PLAN

3/8" = 1'-0"

NOTES:

1. SEE DRAWING GE-1 FOR ELECTRICAL LEGEND & ABBREVIATIONS AND GENERAL REQUIREMENTS.
2. CONTRACTOR SHALL ROUTE CIRCUITS TO PULL BOX AT PRE-FAB BUILDING CONSOLDATING SIMILAR CIRCUTS TO REDUCEC THE QUANTITY OF RACEWAYS ROUTED ON THE CONCRETE SALB.
3. COTRACTOR SHAL PROVIDE SEPERATE PULL BOXES FOR CONTROL AND INSTRUMENT CIRCUITS. THE MAIN 480VAC CIRCUIT CAN BE ROUTED DIRECTLY TO THE PRE-FAB BUILDING MAIN DISCONNECT SWITCH.
4. CONTRACTOR SHALL REMOVE EXISTING WATER HEATER AND SALVAGE TO OWNER. CONTRACTOR SHALL REMOVE CABLE AND EXPOSED CONDUIT BACK TO SOURCE.

LOWER BIRD CREEK WWTP EXPANSION
TMUA PROJECT NO. ES 2006-01
CONTRACT 1B

CHEMICAL STORAGE AND FEED FACILITY
ELECTRICAL
UPPER LEVEL POWER AND LIGHTING PLAN

CITY OF TULSA, OKLAHOMA
TULSA METROPOLITAN UTILITY AUTHORITY
ENGINEERING SERVICES DEPARTMENT

PLANS AND ESTIMATES PREPARED BY:

BLACK & VEATCH Building a world of difference. Black & Veatch Corporation Kansas City, Missouri
Holloway, Updike and Bellen Consulting Engineers Muskogee · Broken Arrow
DWGATES Engineering Services

REGISTERED PROFESSIONAL ENGINEER JOHN R. HENDRICK 15274 OKLAHOMA 9/23/11

REVISION	BY	DATE

PLAN SCALE:	DRAWN	KMA	APPROVED:
	DESIGNED	SDS	
	SURVEY		
PROFILE SCALE:	FIELD MGR.	TOS 10/11	
HORIZONTAL: 1" =	SECT. MGR.		
	PROJ. MGR.	CBN 10/5/11	
VERTICAL 1" =	RECOMMENDED: HAS 10/20/11		DIRECTOR
FILE:	DRAWING: CE-1		DATE 10/28/2011
ATLAS PAGE NO:			SHEET 156 OF 261 SHEETS

JSS 9-28-11

B&V PROJECT NO. 145120

PLOTTED DATE: HET53306, 6/14/2011 11:22:20 AM
SAVED DATE: AND49974, 9/22/2011 9:42:21 AM
CYCNET ID: 145120-3000-E-B0000W4P1

FD145120
D145120BV

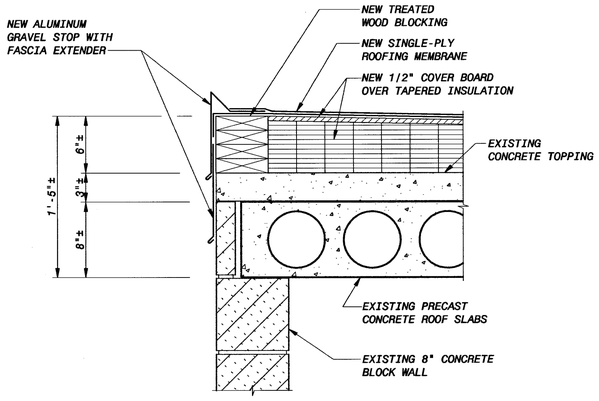

DETAIL A / BA-1
1 1/2" = 1'-0"

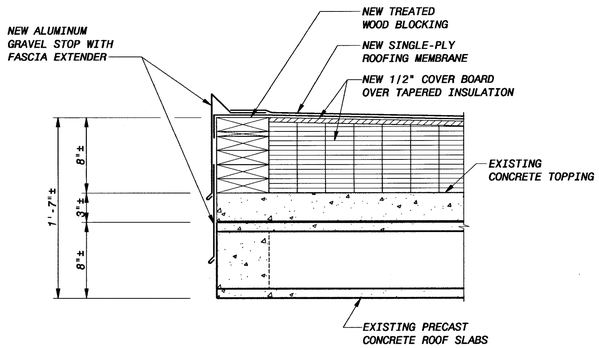

DETAIL B / BA-1
1 1/2" = 1'-0"

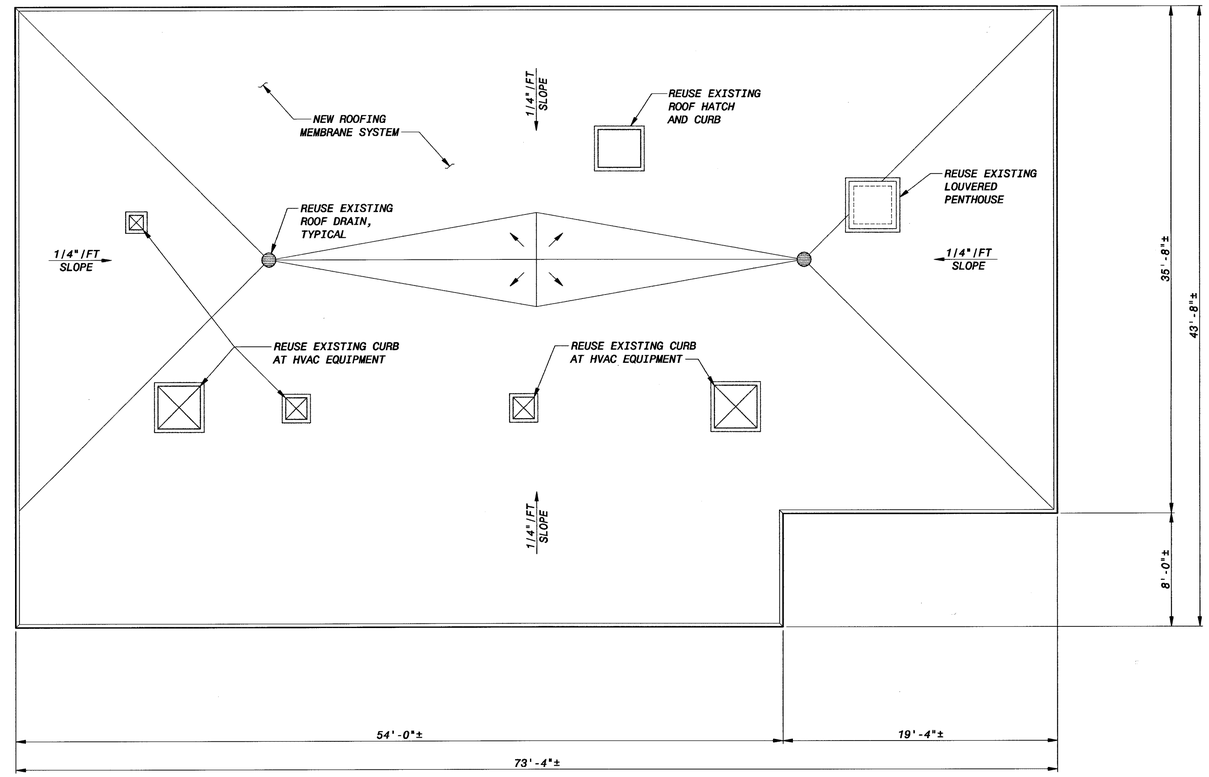

ROOF PLAN
3/16" = 1'-0"

6' 4' 2' 0 5' 10'
3/16"=1'-0"

12" 9" 6" 3" 0 1'
1 1/2"=1'-0"

1

NOTES:
1. PRIOR TO INSTALLATION OF NEW INSULATION AND MEMBRANE SYSTEM, EXISTING INSULATION AND MEMBRANE SYSTEM SHALL BE REMOVED. EXISTING ROOF CURB HATCHES, DRAINS, AND ALL STRUCTURAL COMPONENTS SHALL BE PROTECTED FROM DAMAGE DURING REMOVAL.

LOWER BIRD CREEK WWTP EXPANSION
TMUA PROJECT NO. ES 2006-01
CONTRACT 1B

RETURN SLUDGE PUMP STATION
ARCHITECTURAL
ROOF PLAN AND DETAILS

CITY OF TULSA, OKLAHOMA
TULSA METROPOLITAN UTILITY AUTHORITY
ENGINEERING SERVICES DEPARTMENT

PLANS AND ESTIMATES PREPARED BY:
BLACK & VEATCH Building a world of difference — Black & Veatch Corporation, Kansas City, Missouri
Holloway, Updike and Bellon Consulting Engineers, Muskogee · Broken Arrow
SWGATES Engineering Services

STATE OF OKLAHOMA — ALLISE E. NEWMAN — A5784 — LICENSED ARCHITECT
09/23/2011

REVISION	BY	DATE
Addendum No. 1	PSB	1-6-12

PLAN SCALE:	DRAWN	MDE	
	DESIGNED	PDR	
	SURVEY		
PROFILE SCALE:	FIELD MGR.	TOS	10/11
HORIZONTAL: 1" =	SECT. MGR.		
	PROJ. MGR.	PSB	10/3/11
VERTICAL 1" =	RECOMMENDED: HAS 10/30/11		

APPROVED: DIRECTOR

FILE: BA-01 DRAWING: BA-1 DATE 10/28/2011
ATLAS PAGE NO: SHEET 157 OF 261 SHEETS

PSB 9-28-11

B&V PROJECT NO. 145120

PLOTTED DATE: EDM17043, 6/16/2011 8:55:46 AM
SAVED DATE: EDM17043, 9/20/2011 3:34:59 PM
CTONET ID: 145120-3000-A-BB000NBFT

FD145120
D145120BV

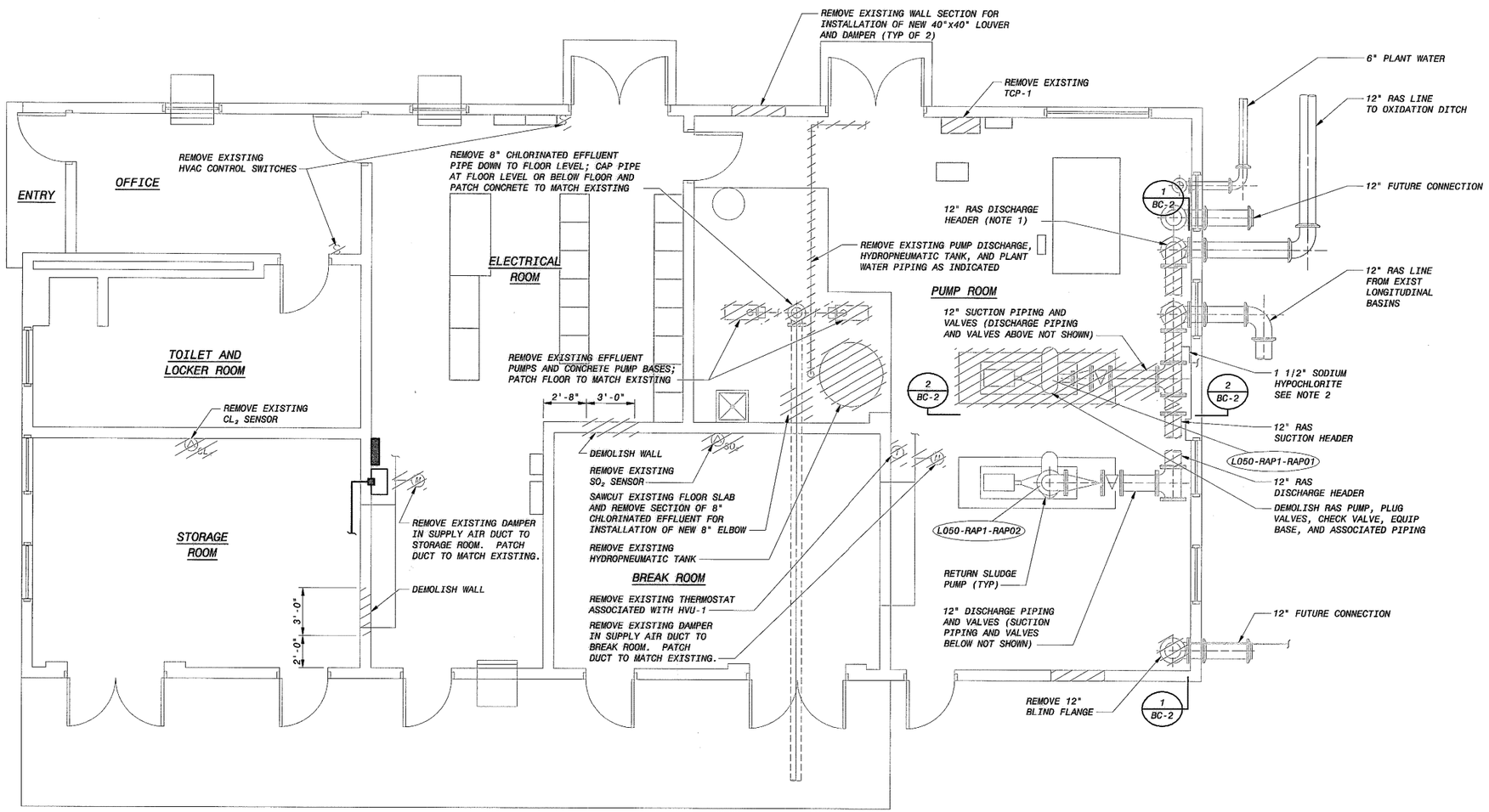

PLAN
1/4" = 1'-0"

NOTES:

1. REMOVE AND RELOCATE DISCHARGE HEADER TO LOWER ELEVATIONS, SEE SHEET BC-4. EXISTING PIPE SUPPORTS SHALL BE REMOVED AND REPLACED WITH NEW SUPPORTS AT REVISED ELEVATION. WHERE POSSIBLE, CONTRACTOR SHALL REUSE EXISTING PIPE SUPPORTS. ANY MODIFICATIONS TO EXISTING PIPE SUPPORTS SHALL BE COMPLETED IN A MANNER ACCEPTABLE TO ENGINEER.
2. REMOVE SODIUM HYPOCHLORITE LINE FROM 90° ELBOW TO RAS SUCTION PIPE. PLUG AND CAP EXISTING FEED POINT AT RAS SUCTION PIPE.

REGISTERED PROFESSIONAL ENGINEER KURT ARLAN RONNEKAMP 17459 OKLAHOMA 9/28/11

REVISION	BY	DATE

LOWER BIRD CREEK WWTP EXPANSION
TMUA PROJECT NO. ES 2006-01
CONTRACT 1B

RETURN SLUDGE PUMP STATION
CIVIL/STRUCTURAL
DEMOLITION PLAN

CITY OF TULSA, OKLAHOMA
TULSA METROPOLITAN UTILITY AUTHORITY
ENGINEERING SERVICES DEPARTMENT

PLANS AND ESTIMATES PREPARED BY:
BLACK & VEATCH Building a world of difference. Black & Veatch Corporation Kansas City, Missouri
Holloway, Updike and Bollen Consulting Engineers Muskogee · Broken Arrow
OWGATES Engineering Services

PLAN SCALE:	DRAWN	JKS		APPROVED:
	DESIGNED	CAC JMS		
	SURVEY			
PROFILE SCALE:	FIELD MGR.	JOB	10/11	
HORIZONTAL: 1" =	SECT. MGR.			
	PROJ. MGR.		10/5/11	
VERTICAL 1" =	RECOMMENDED: HAS 10/30/11			DIRECTOR
FILE:	DRAWING: BC-1			DATE 10/28/2011
ATLAS PAGE NO:				SHEET 158 OF 261 SHEETS

9-28-11 B&V PROJECT NO. 132886

PLOTTED DATE: 9/21/2011 7:13:00 PM, Batch Plot
SAVED DATE: LOV16744, 9/21/2011 5:29:33 AM
C:\ONE1 ID:145120-20009-C-B00005-02
FD145120
D145120091

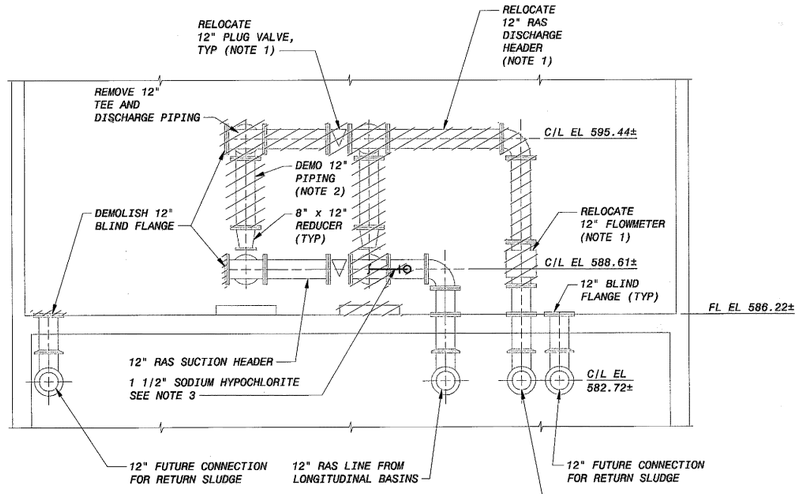

SECTION 1 / BC-1
1/4" = 1'-0"

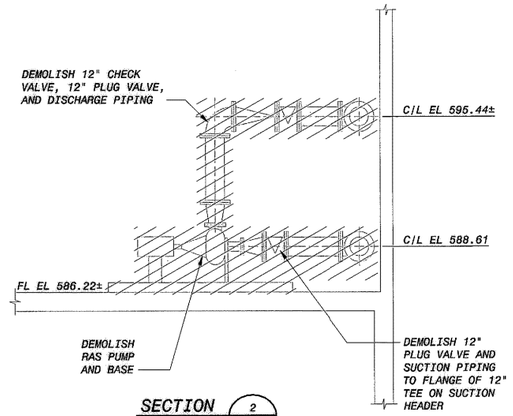

SECTION 2 / BC-1
1/4" = 1'-0"

NOTES:

1. *REMOVE AND RELOCATE DISCHARGE HEADER, PLUG VALVE, AND FLOWMETER. SEE SHEET BC-4. EXISTING PIPE SUPPORTS SHALL BE REMOVED AND REPLACED WITH NEW SUPPORTS AT REVISED ELEVATION. WHERE POSSIBLE, CONTRACTOR SHALL REUSE EXISTING PIPE SUPPORTS. ANY MODIFICATIONS TO EXISTING PIPE SUPPORTS SHALL BE COMPLETED IN A MANNER ACCEPTABLE TO ENGINEER.*
2. *PIPING SHALL BE REMOVED AS REQUIRED TO LOWER THE DISCHARGE HEADER ELEVATION TO 592.22.*
3. *REMOVE SODIUM HYPOCHLORITE LINE FROM 90° ELBOW TO RAS SUCTION PIPE. PLUG AND CAP EXISTING FEED POINT AT RAS SUCTION PIPE.*

LOWER BIRD CREEK WWTP EXPANSION
TMUA PROJECT NO. ES 2006-01
CONTRACT 1B

RETURN SLUDGE PUMP STATION
CIVIL/STRUCTURAL
DEMOLITION SECTIONS

CITY OF TULSA, OKLAHOMA
TULSA METROPOLITAN UTILITY AUTHORITY
ENGINEERING SERVICES DEPARTMENT

PLANS AND ESTIMATES PREPARED BY:

BLACK & VEATCH Building a world of difference. Black & Veatch Corporation Kansas City, Missouri
Holloway, Updike and Bellen Consulting Engineers Muskogee · Broken Arrow
D.W. GATES Engineering Services

REGISTERED PROFESSIONAL ENGINEER KURT ARLAN RONNEKAMP 17439 OKLAHOMA

REVISION	BY	DATE

PLAN SCALE:	DRAWN	JKS		APPROVED:
	DESIGNED	CAG, JMS		
	SURVEY			
PROFILE SCALE:	FIELD MGR.	TOS	10/11	
HORIZONTAL: 1" =	SECT. MGR.			
	PROJ. MGR.	PBV	10/5/11	
VERTICAL 1" =	RECOMMENDED: HBS 10/30/11			DIRECTOR
FILE:	DRAWING: BC-2			DATE 10/28/2011
ATLAS PAGE NO:				SHEET 159 OF 261 SHEETS

JBS 9-28-11

B&V PROJECT NO. 132886

PLOTTED DATE: 9/21/2011 7:13:21 PM, Batch Plot
SAVED DATE: SCH42738, 6/14/2011 8:38:00 PM
CYGNET ID: 145120-3000-C-B0000SK34

FD145120
D145120BV

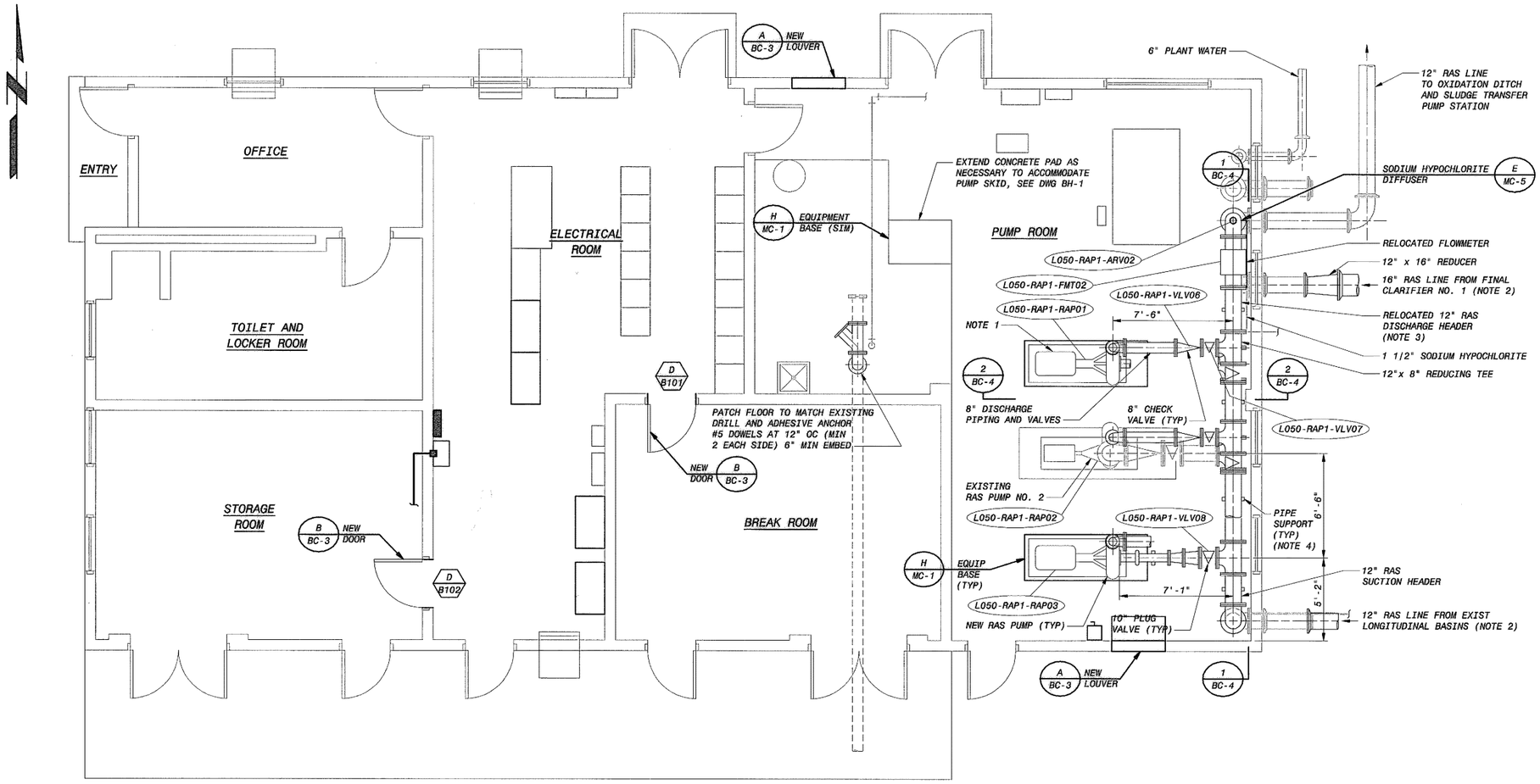

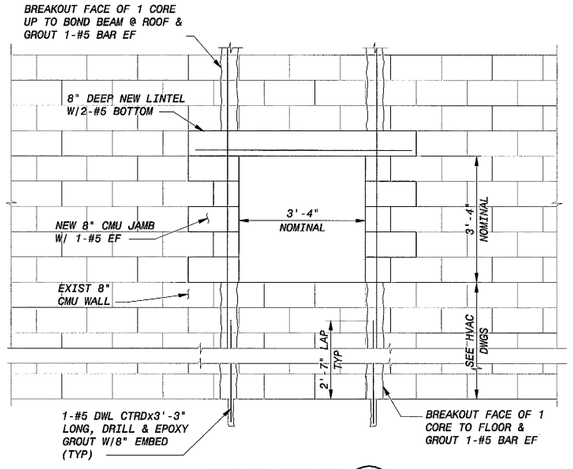

LOUVER DETAIL A
1/2" = 1'-0"

PLAN
1/4" = 1'-0"

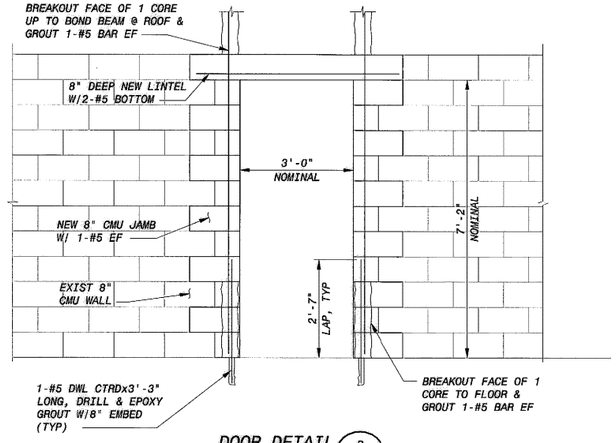

DOOR DETAIL B
1/2" = 1'-0"

NOTES:

1. A 1400 GPM NON-CLOG, HORIZONTAL, END-SUCTION CENTRIFUGAL PUMP SHALL REPLACE THE EXISTING PUMP. THE EXISTING CHECK AND PLUG VALVES SHALL BE REPLACED.
2. THE EXISTING 12" RAS LINE FROM THE EXISTING LONGITUDINAL BASINS WILL BE RE-ROUTED IN THE YARD TO ENTER THE RETURN SLUDGE PUMP STATION AT THE FUTURE CONNECTION LOCATED AT THE SOUTHEAST CORNER OF THE BUILDING. THE NEW 16" RAS LINE FROM THE FINAL CLARIFIER NO. 1 WILL USE THE CONNECTION CURRENTLY USED BY THE EXISTING LONGITUDINAL BASINS.
3. DISCHARGE HEADER SHALL BE RELOCATED. ALL DISCHARGE FITTINGS AND VALVES SHALL BE RELOCATED, SEE SHEET BC-4.
4. WHERE POSSIBLE, CONTRACTOR SHALL REUSE EXISTING PIPE SUPPORTS. ANY MODIFICATIONS TO EXISTING PIPE SUPPORTS SHALL BE COMPLETED IN A MANNER ACCEPTABLE TO ENGINEER.

REGISTERED PROFESSIONAL ENGINEER KURT ARLAN RONNEKAMP 17439 OKLAHOMA 9-23-11

REVISION	BY	DATE

LOWER BIRD CREEK WWTP EXPANSION
TMUA PROJECT NO. ES 2006-01
CONTRACT 1B

RETURN SLUDGE PUMP STATION
CIVIL/STRUCTURAL
PLAN

CITY OF TULSA, OKLAHOMA
TULSA METROPOLITAN UTILITY AUTHORITY
ENGINEERING SERVICES DEPARTMENT

PLANS AND ESTIMATES PREPARED BY:
BLACK & VEATCH Building a world of difference. Black & Veatch Corporation Kansas City, Missouri
Holloway, Updike and Bielen Consulting Engineers Muskogee · Broken Arrow
OWGATES Engineering Services

PLAN SCALE:	DRAWN	JKS	APPROVED:
	DESIGNED	CAC, JMS	
	SURVEY		
PROFILE SCALE:	FIELD MGR.	JOB 10/11	
HORIZONTAL: 1" =	SECT. MGR.		
	PROJ. MGR.	BEV 10/3/11	
VERTICAL 1" =	RECOMMENDED:	HAS 10/30/11	DIRECTOR
FILE:	DRAWING: BC-3		DATE 10/28/2011
ATLAS PAGE NO:			SHEET 160 OF 261 SHEETS

9-28-11 B&V PROJECT NO. 132886

PLOTTED DATE: 9/21/2011 7:13:51 PM, Batch Plot
SAVED DATE: EDM17043, 9/21/2011 6:28:56 AM
CYGNET ID: 145120-3000-C-B0000SK33

FD145120
D145120SV

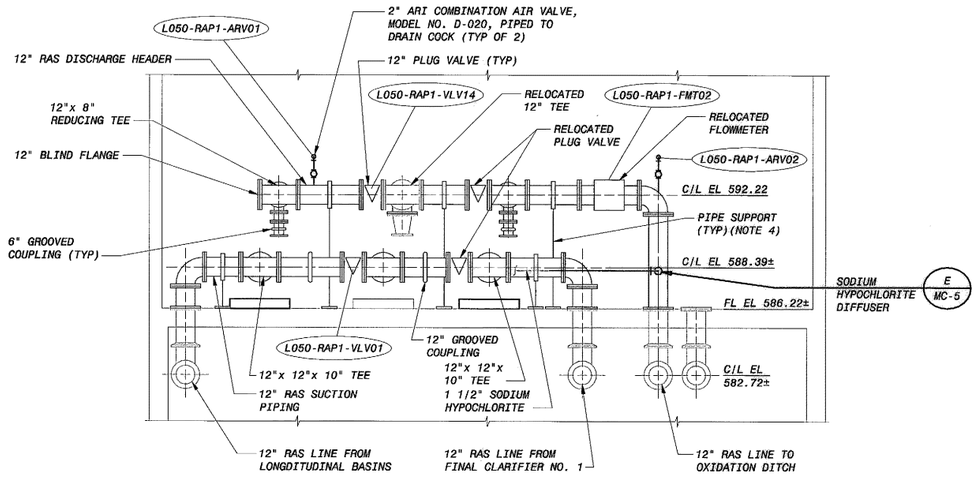

SECTION 1 / BC-3
1/4" = 1'-0"

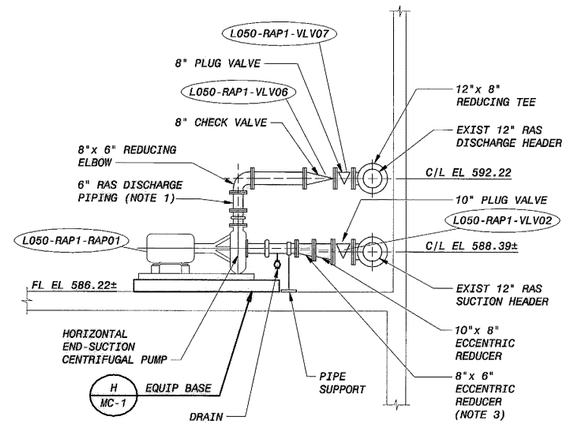

SECTION 2 / BC-3
1/4" = 1'-0"

NOTES:

1. *COORDINATE WITH PUMP SUPPLIER ON SIZE OF DISCHARGE CONNECTION.*
2. *COORDINATE WITH PUMP SUPPLIER ON THE LENGTHS OF SPOOL PIECES REQUIRED DUE TO VARYING INLET AND DISCHARGE CONNECTIONS. MINIMUM LENGTH OF SPOOL IS 6".*
3. *8"x6" ECCENTRIC REDUCER MAY NOT BE NECESSARY, COORDINATE WITH PUMP SUPPLIER ON THE SIZE OF THE INLET.*
4. *WHERE POSSIBLE, CONTRACTOR SHALL REUSE EXISTING PIPE SUPPORTS. ANY MODIFICATIONS TO EXISTING PIPE SUPPORTS SHALL BE COMPLETED IN A MANNER ACCEPTABLE TO ENGINEER.*

REGISTERED PROFESSIONAL ENGINEER
KURT ARDAN RONNEKAMP
17439
10/28/11
OKLAHOMA

REVISION	BY	DATE

LOWER BIRD CREEK WWTP EXPANSION
TMUA PROJECT NO. ES 2006-01
CONTRACT 1B

RETURN SLUDGE PUMP STATION
CIVIL/STRUCTURAL
SECTIONS

CITY OF TULSA, OKLAHOMA
TULSA METROPOLITAN UTILITY AUTHORITY
ENGINEERING SERVICES DEPARTMENT

PLANS AND ESTIMATES PREPARED BY:

BLACK & VEATCH Building a world of difference
Black & Veatch Corporation Kansas City, Missouri
Holloway, Updike and Bellon Consulting Engineers Muskogee · Broken Arrow
DWGATES Engineering Services

PLAN SCALE:	DRAWN	JKS	APPROVED:
	DESIGNED	CAC, JMS	
	SURVEY		
PROFILE SCALE:	FIELD MGR.	TDS 10/11	
HORIZONTAL: 1" =	SECT. MGR.		
	PROJ. MGR.	RBV 10/27/11	
VERTICAL 1" =	RECOMMENDED: HAS 10/20/11		DIRECTOR
FILE:	DRAWING: BC-4		DATE 10/28/2011
ATLAS PAGE NO:			SHEET 161 OF 261 SHEETS

JBS 9-28-11

B&V PROJECT NO. 132886

PLOTTED DATE: 9/21/2011 7:14:14 PM, Batch Plot
SAVED DATE: SAN56265, 9/19/2011 11:11:22 AM
CYGNET ID: 145120-3000-C-B00005KJS

FD145120
D145120BV

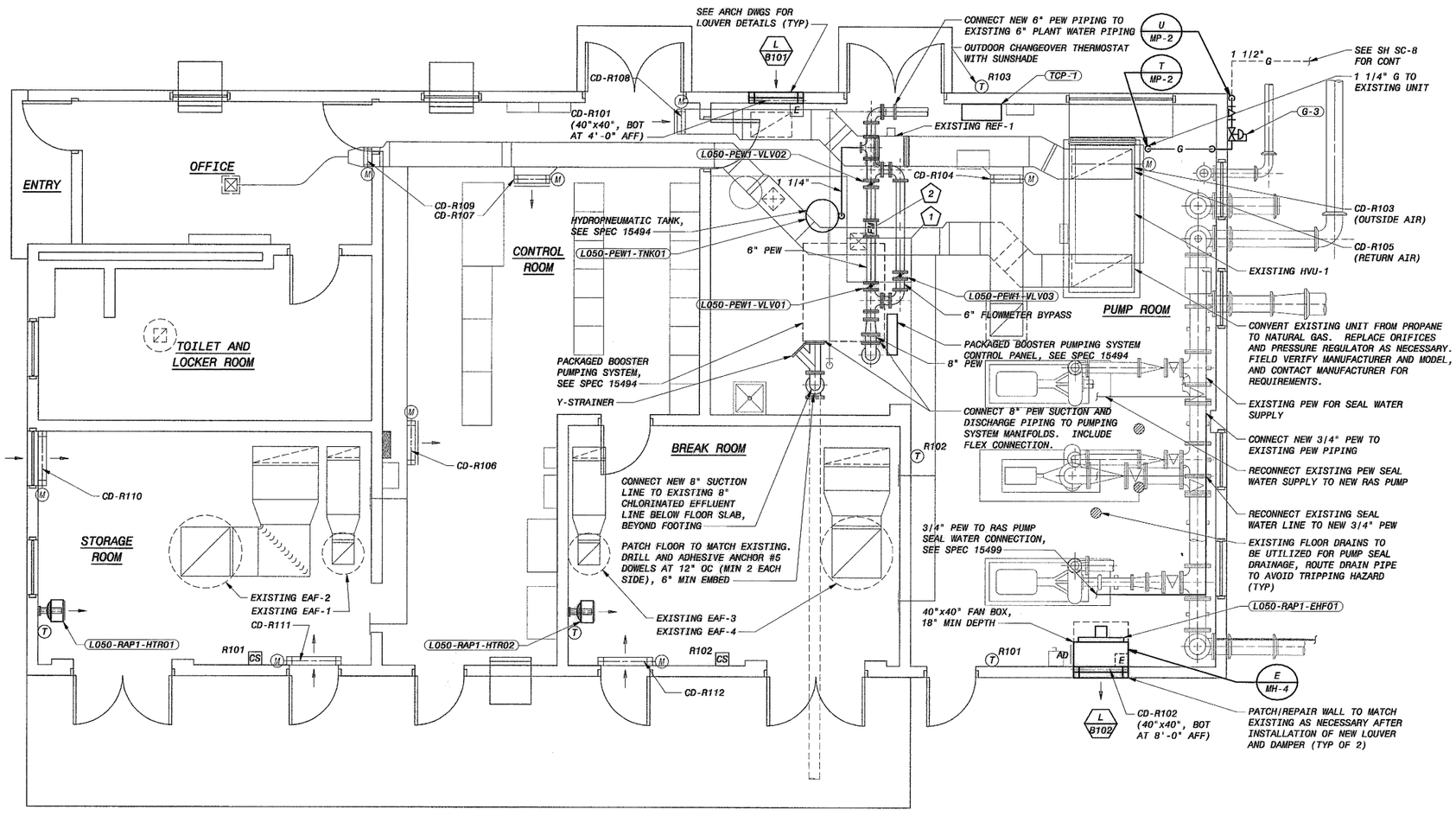

FLOOR PLAN

1/4" = 1'-0"

GENERAL NOTES:

1. REMOVE ALL CONTROLS ASSOCIATED WITH EXISTING HVAC SYSTEMS RECEIVING NEW CONTROLS AS INDICATED IN THE SEQUENCE OF OPERATIONS PARAGRAPH 6 ON SH MH3.

2. SEE SHEET BC-1 FOR DEMOLITION.

3. CONTROL DAMPERS ASSOCIATED WITH THE EXISTING HVAC SYSTEMS SHALL BE RE-LABELED AS INDICATED.

PLAN NOTES:

(1) EXTEND CONCRETE PAD AS NECESSARY TO ACCOMMODATE PUMP SKID, WITHOUT OBSTRUCTING REMOVAL PATH FOR OTHER EQUIPMENT INSTALLED IN THE PUMP ROOM. SEE CIVIL SHEETS FOR EQUIPMENT BASE DETAILS (SIM).

FLOWMETER PROVIDED WITH THE PUMPING SYSTEM SHALL BE INSTALLED IN THE OVERHEAD DISCHARGE PIPING. ADEQUATE STRAIGHT PIPING LENGTH SHALL BE PROVIDED FOR METER INSTALLATION.

LOWER BIRD CREEK WWTP EXPANSION
TMUA PROJECT NO. ES 2006-01
CONTRACT 1B

RETURN SLUDGE PUMP STATION
PLUMBING/HVAC
FLOOR PLAN

CITY OF TULSA, OKLAHOMA
TULSA METROPOLITAN UTILITY AUTHORITY
ENGINEERING SERVICES DEPARTMENT

PLANS AND ESTIMATES PREPARED BY:

BLACK & VEATCH Building a world of difference
Black & Veatch Corporation Kansas City, Missouri
Holloway, Updike and Ballou Consulting Engineers Muskogee · Broken Arrow
DEWGATES Engineering Services

REGISTERED PROFESSIONAL ENGINEER DAVID WILLIAM NELSON 17980 5/22/11 OKLAHOMA

REVISION	BY	DATE

PLAN SCALE: 1/4" = 1'-0"	DRAWN	BDL	APPROVED:
	DESIGNED	MM,TD	
	SURVEY		
PROFILE SCALE:	FIELD MGR.	TDS 10/11	
HORIZONTAL: 1" =	SECT. MGR.		
	PROJ. MGR.	RGV 10/31/11	
VERTICAL 1" =	RECOMMENDED: HAS 10/30/11		DIRECTOR
FILE: BH-01.DWG	DRAWING: BH-1		DATE 10/28/2011
ATLAS PAGE NO:			SHEET 162 OF 261 SHEETS

9-28-11 B&V PROJECT NO. 132886

PLOTTED DATE: 9/22/2011 5:41:07 AM, Batch Plot
SAVED DATE: LOV16744, 9/21/2011 5:32:44 AM
C-CONET ID: 145125-S000-H EB000172BW

FD145120
D145125BV

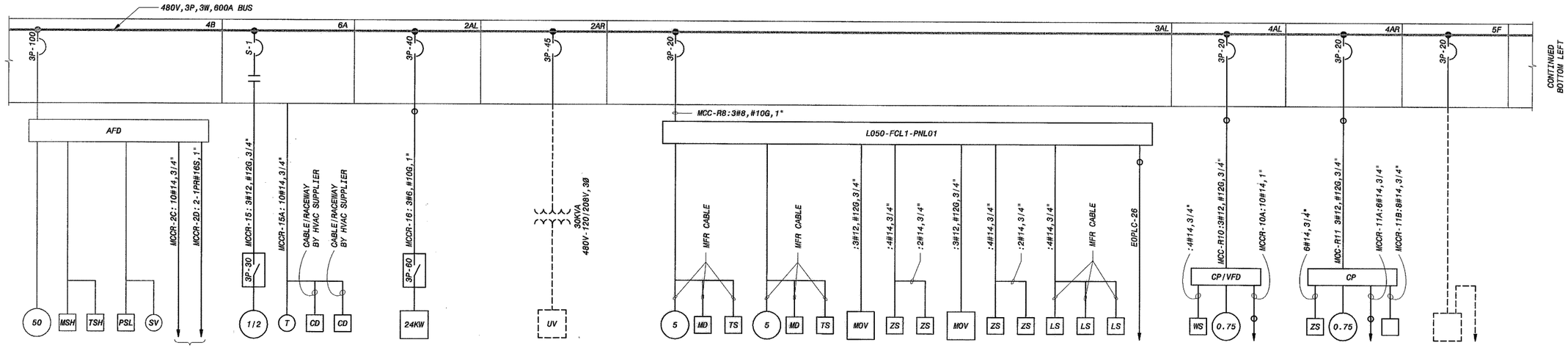

EXISTING MCC-OB2 PARTIAL ONE-LINE DIAGRAM

RETURN SLUDGE PUMP STATION

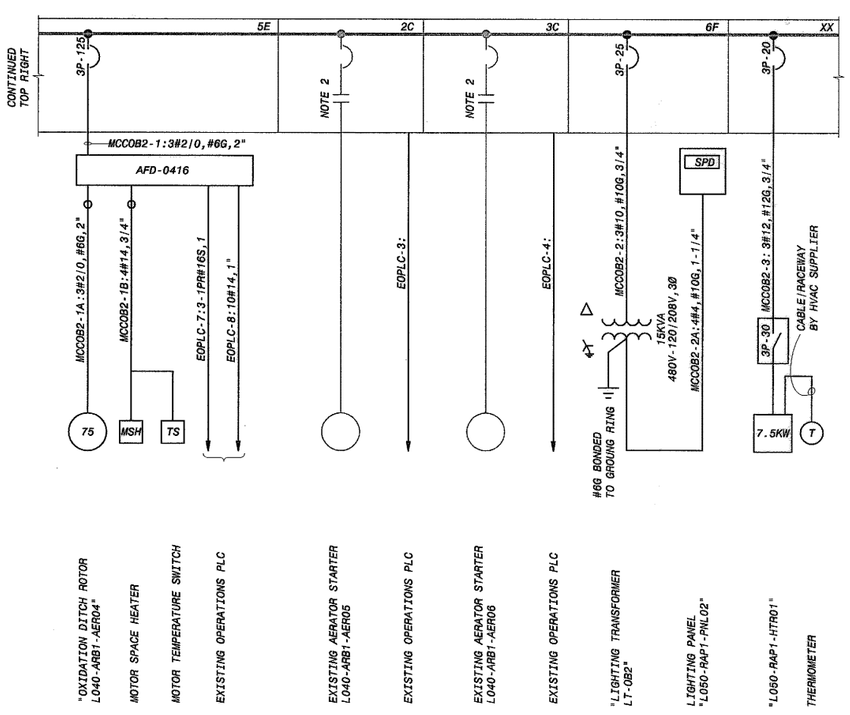

NOTES:

1. SEE DRAWING GE-1 FOR ELECTRICAL LEGEND & ABBREVIATIONS AND GENERAL REQUIREMENTS.
2. CONTRACTOR SHALL MODIFY STARTER WIRING AS SHOWN IN ELECTRICAL SCHEMATICS.

REGISTERED PROFESSIONAL ENGINEER
JOHN R. HENDRICK
15274
OKLAHOMA
9/23/11

REVISION	BY	DATE

LOWER BIRD CREEK WWTP EXPANSION
TMUA PROJECT NO. ES 2006-01
CONTRACT 1B

RETURN SLUDGE PUMP STATION
ELECTRICAL
EXISTING MCC-OB1 ONE-LINE DIAGRAM

CITY OF TULSA, OKLAHOMA
TULSA METROPOLITAN UTILITY AUTHORITY
ENGINEERING SERVICES DEPARTMENT

PLANS AND ESTIMATES PREPARED BY:

BLACK & VEATCH Building a world of difference. Black & Veatch Corporation Kansas City, Missouri

Holloway, Updike and Bellen Consulting Engineers Muskogee · Broken Arrow

DWGATES Engineering Services

PLAN SCALE:	DRAWN	KMA	APPROVED:
	DESIGNED	SDS	
	SURVEY		
PROFILE SCALE:	FIELD MGR.	TCB 10/11	
HORIZONTAL: 1" =	SECT. MGR.		
	PROJ. MGR.	RBV 10/25/11	
VERTICAL 1" =	RECOMMENDED: HAS 10/31/11		DIRECTOR
FILE:	DRAWING: BE-2		DATE 10/28/2011
ATLAS PAGE NO:			SHEET 164 OF 261 SHEETS

JRH 9-28-11

B&V PROJECT NO. 145120

PLOTTED DATE: HET53306, 6/14/2011 8:21:34 AM
SAVED DATE: AND49974, 9/22/2011 9:49:49 AM
CYGNET ID: 145120-3000-E-BD003N90

FD145120
D145120SV

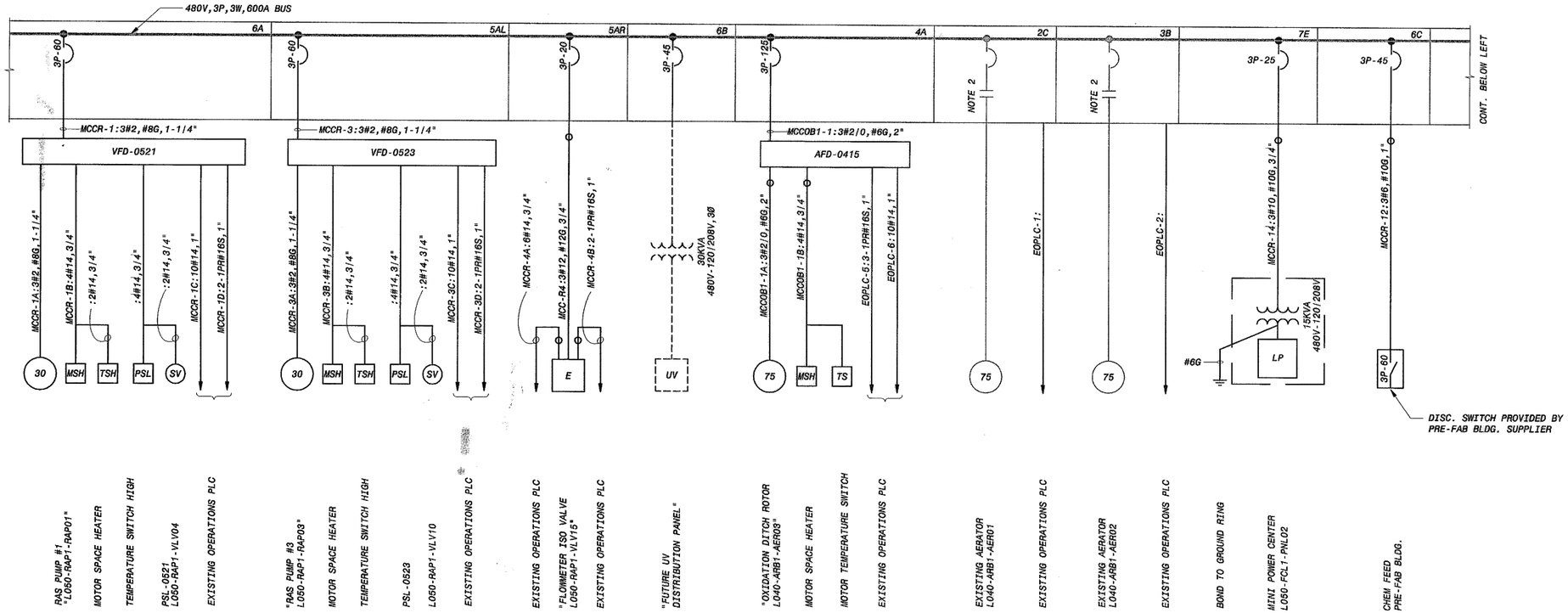

EXISTING MCC-0B1 PARTIAL ONE-LINE DIAGRAM

RETURN SLUDGE PUMP STATION

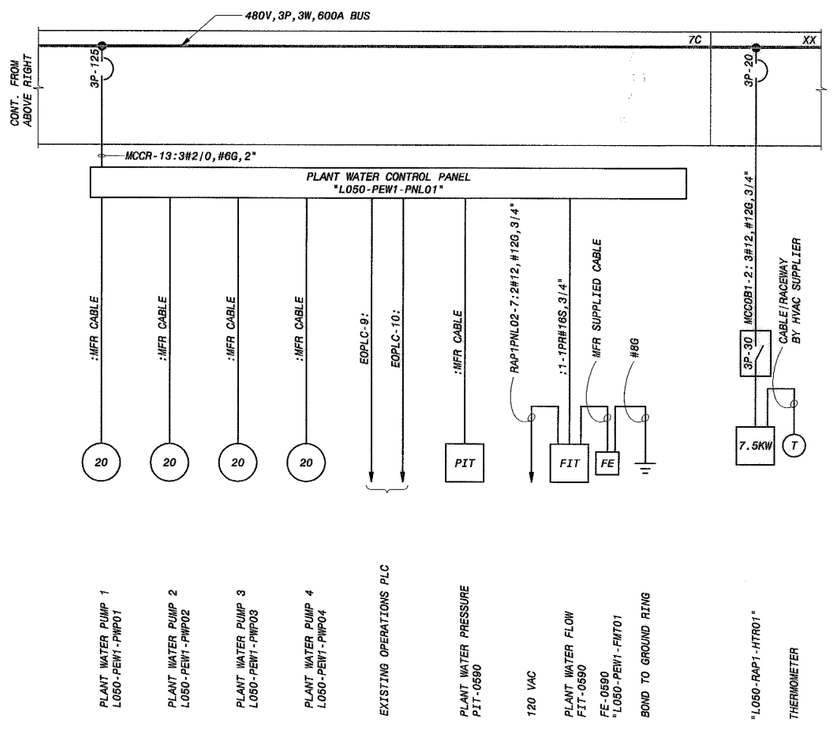

EXISTING MCC-0B1 PARTIAL ONE-LINE DIAGRAM (CONT.)

RETURN SLUDGE PUMP STATION

NOTES:

1. SEE DRAWING GE-1 FOR ELECTRICAL LEGEND & ABBREVIATIONS AND GENERAL REQUIREMENTS.
2. CONTRACTOR SHALL MODIFY STARTER WIRING AS SHOWN IN ELECTRICAL SCHEMATICS.

REGISTERED PROFESSIONAL ENGINEER
JOHN R. HENDRICK
15274
OKLAHOMA
10/28/11

REVISION	BY	DATE

LOWER BIRD CREEK WWTP EXPANSION
TMUA PROJECT NO. ES 2006-01
CONTRACT 1B

RETURN SLUDGE PUMP STATION
ELECTRICAL
EXISTING MCC-OB2 ONE-LINE

CITY OF TULSA, OKLAHOMA
TULSA METROPOLITAN UTILITY AUTHORITY
ENGINEERING SERVICES DEPARTMENT

PLANS AND ESTIMATES PREPARED BY:

BLACK & VEATCH Building a world of difference
Black & Veatch Corporation Kansas City, Missouri
Holloway, Updike and Bellon Consulting Engineers Muskogee · Broken Arrow
DWGATES Engineering Services

PLAN SCALE:	DRAWN	KMA	APPROVED:
	DESIGNED	SDS	
	SURVEY		
PROFILE SCALE:	FIELD MGR.	TOB 10/11	
HORIZONTAL: 1" =	SECT. MGR.		
	PROJ. MGR.	RBA 10/31/11	
VERTICAL 1" =	RECOMMENDED:	HAS 10/30/11	DIRECTOR
FILE:	DRAWING: BE-3		DATE 10/28/2011
ATLAS PAGE NO:			SHEET 165 OF 261 SHEETS

9-28-11 B&V PROJECT NO. 145120

PLOTTED DATE: HETS3306, 6/14/2011 8:15:47 AM
SAVED DATE: AN249974, 9/21/2011 11:01:23 AM
CTONET ID: 145120-3000-E-BD000WING

FD145120
D145120BV

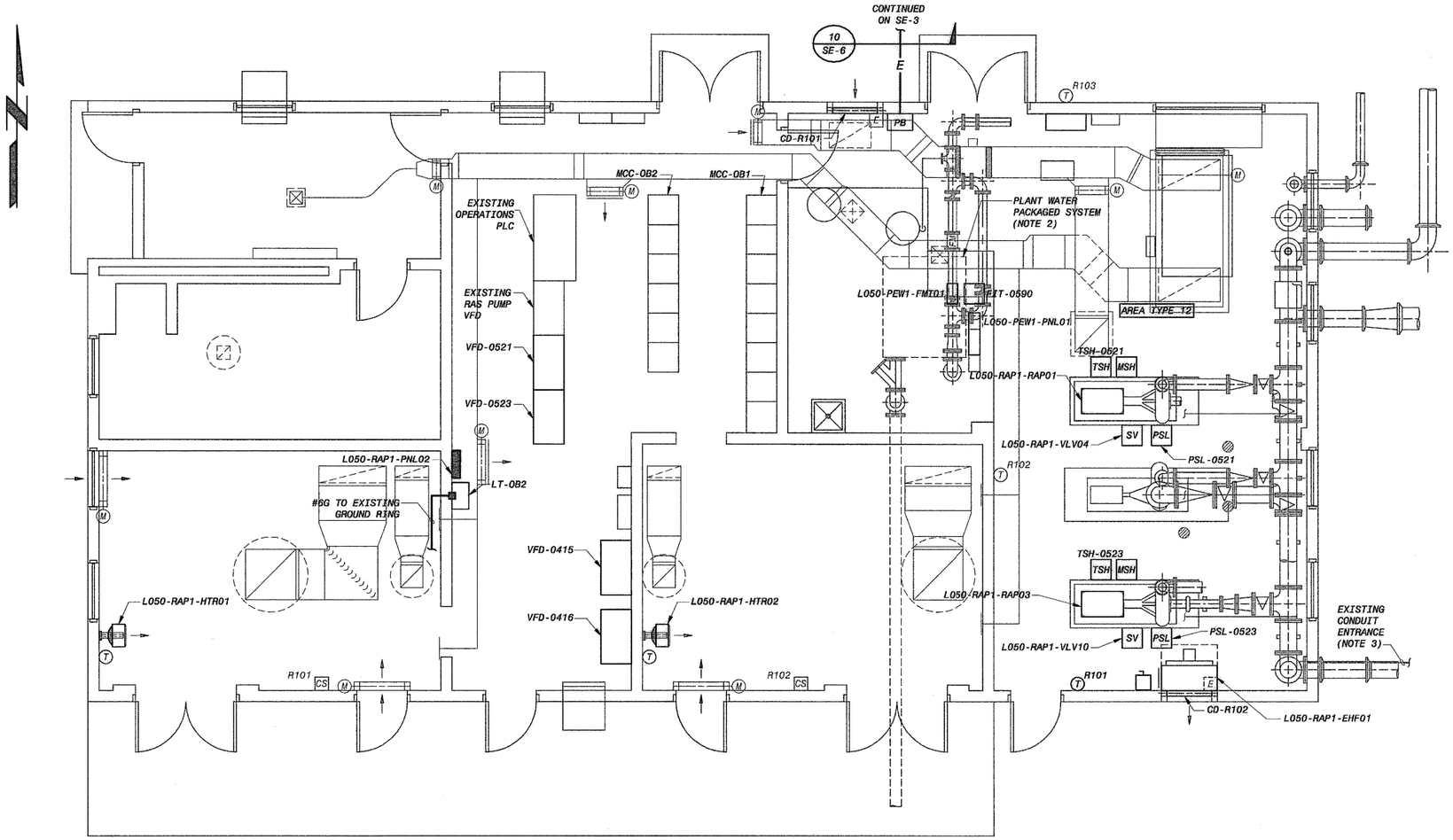

POWER PLAN

1/4" = 1'-0"

NOTES:

1. SEE DRAWING GE-1 FOR ELECTRICAL LEGEND & ABBREVIATIONS AND GENERAL REQUIREMENTS.
2. PACKAGED SYSTEM INCLUDES L050-PEW1,-PWP01, -PWP02, -PWP03, -PWP04 & PIT-0590.
3. CONTRACTOR SHALL RELOCATE 4 EXISTING CONDUITS ENTERING BUILDING WHICH CONFLICT WITH NEW PIPING TO BE INSTALLED. CONTRACTOR SHALL REMOVE ALL CABLE ROOTED THROUGH EXISTING CONDUIT. PROVIDE NEW CONDUIT AS REQUIRED TO CIRCUMVENT PIPING CONFLICT, AND INSTALL NEW CABLE TO MATCH EXISTING. EXISTING CIRCUITS ARE AS FOLLOWS:
   - 3#2,#6G,2"C
   - 3#2,#6G,2"C
   - 41#12,2"C
   - 2-1PR#16S,2-1PR#18S,3"C

   FOR BIDDING PURPOSES ASSUME ALL CIRCUITS ARE 180 FEET IN LENGTH.

REGISTERED PROFESSIONAL ENGINEER
JOHN R. HENDRICK
15274
OKLAHOMA
9/29/11

REVISION	BY	DATE

LOWER BIRD CREEK WWTP EXPANSION
TMUA PROJECT NO. ES 2006-01
CONTRACT 1B

RETURN SLUDGE PUMP STATION
ELECTRICAL
POWER PLAN

CITY OF TULSA, OKLAHOMA
TULSA METROPOLITAN UTILITY AUTHORITY
ENGINEERING SERVICES DEPARTMENT

PLANS AND ESTIMATES PREPARED BY:

BLACK & VEATCH Building a world of difference. Black & Veatch Corporation Kansas City, Missouri
Holloway, Updike and Dallas Consulting Engineers Muskogee · Broken Arrow
OWGATES Engineering Services

PLAN SCALE:	DRAWN	KMA		APPROVED:
	DESIGNED	SDS		
	SURVEY			
PROFILE SCALE:	FIELD MGR.	TDS	10/11	
	SECT. MGR.			
HORIZONTAL: 1" =	PROJ. MGR.	BGV	10/3/11	
	RECOMMENDED: HAS 10/30/11			DIRECTOR
VERTICAL 1" =				
FILE:	DRAWING: BE-4			DATE 10/28/2011
ATLAS PAGE NO:				SHEET 166 OF 261 SHEETS

9-28-11 B&V PROJECT NO. 132886

PLOTTED DATE: HET53306, 6/14/2011 12:13:28 PM
SAVED DATE: AND49974, 9/22/2011 9:53:08 AM
CYGNET ID: 14S20-3020-E-E0000133R

FD145120
FD151208V

RETURN SLUDGE PUMP

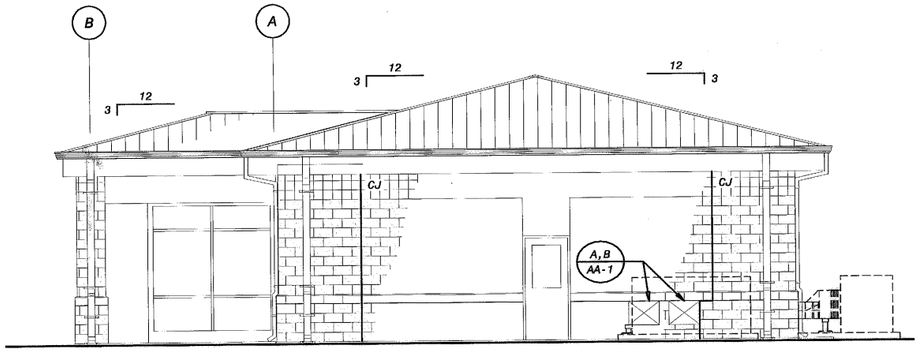

EAST ELEVATION
3/16" = 1'-0"

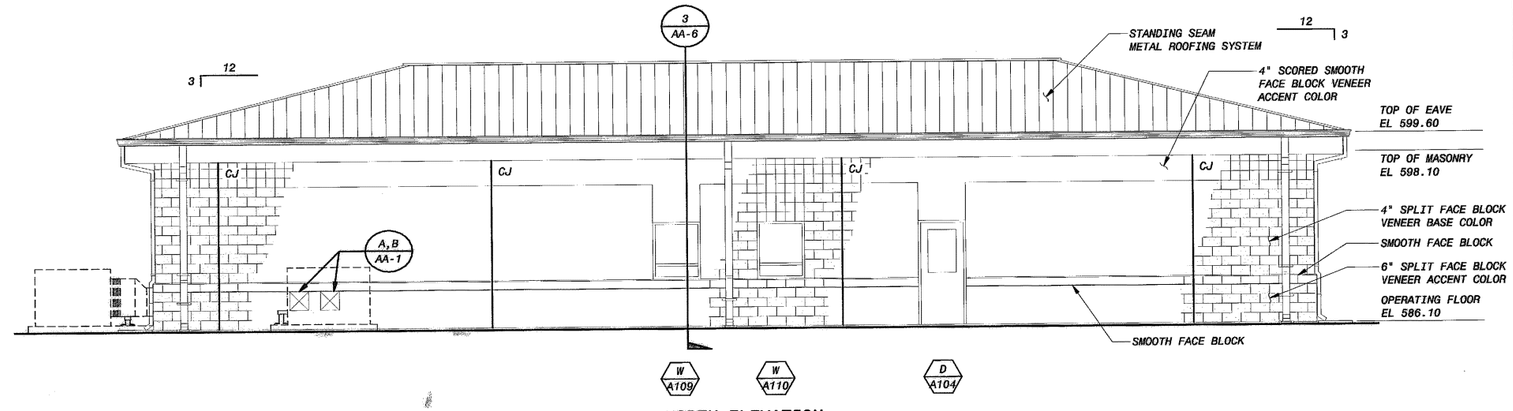

NORTH ELEVATION
3/16" = 1'-0"

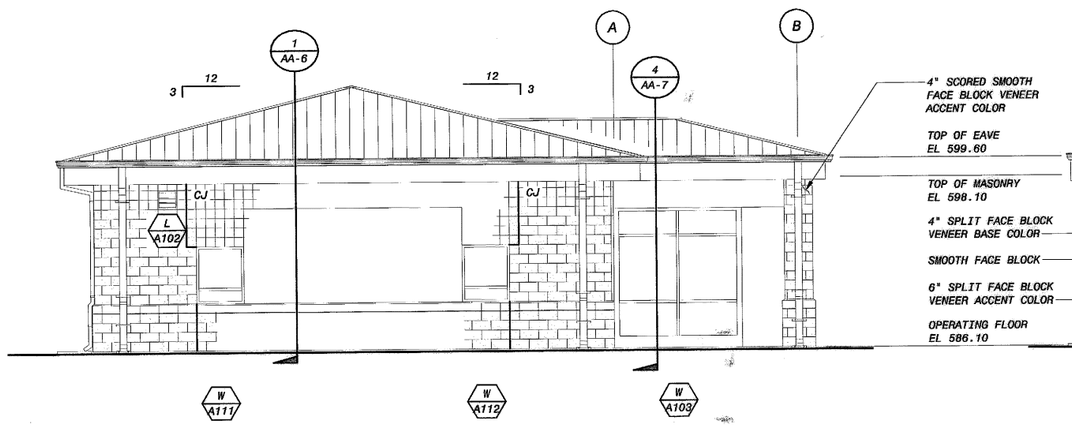

WEST ELEVATION
3/16" = 1'-0"

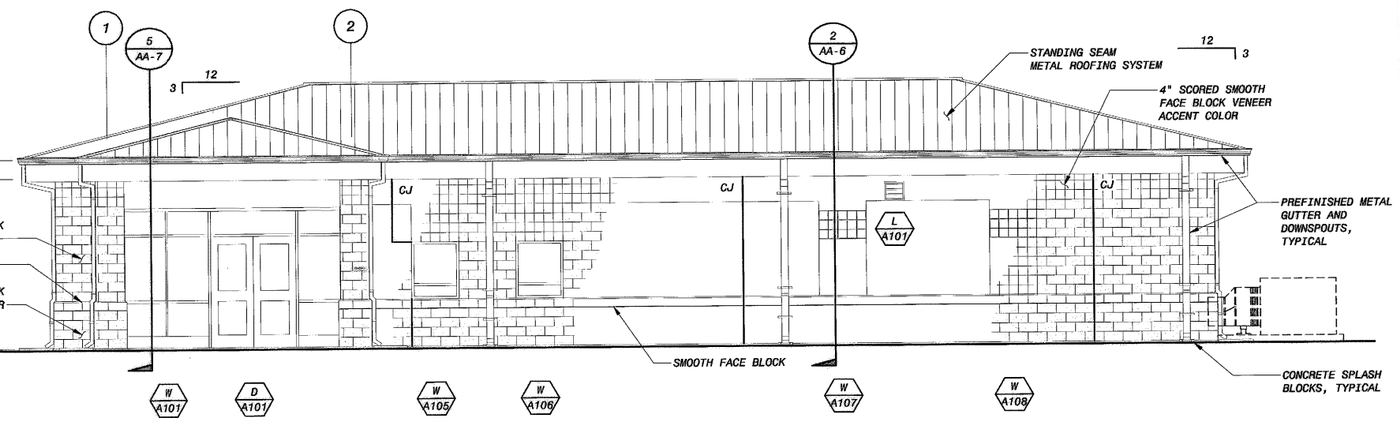

SOUTH ELEVATION
3/16" = 1'-0"

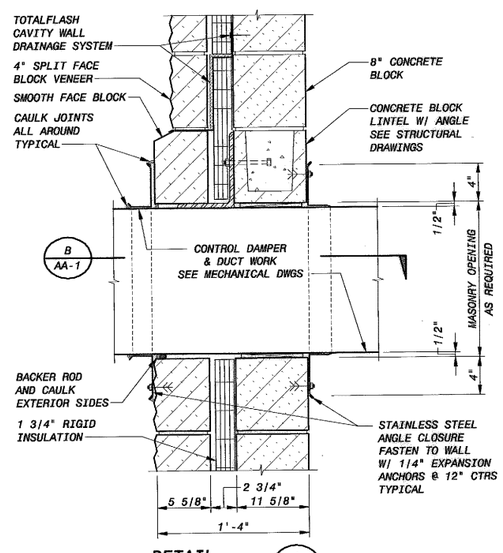

DETAIL
1 1/2" = 1'-0" (A / AA-1)

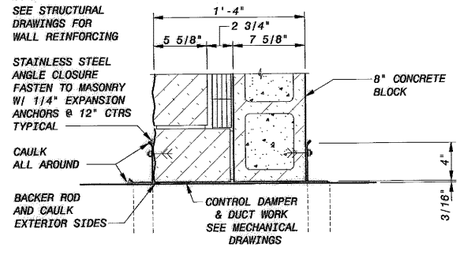

DETAIL
1 1/2" = 1'-0" (B / AA-1)

NOTES:

1. VENEER FACE BLOCK CONTROL JOINT (CJ). SEE STRUCTURAL DRAWINGS FOR BACKUP CONCRETE MASONRY UNITS (CMU) WALL CONTROL JOINT LOCATIONS.

12" 9" 6" 3" 0 1'
1 1/2"=1'-0"

6' 4' 2' 0 5' 10'
3/16"=1'-0"

LOWER BIRD CREEK WWTP EXPANSION
TMUA PROJECT NO. ES 2006-01
CONTRACT 1B

OPERATIONS BUILDING
ARCHITECTURAL
BUILDING ELEVATIONS

CITY OF TULSA, OKLAHOMA
TULSA METROPOLITAN UTILITY AUTHORITY
ENGINEERING SERVICES DEPARTMENT

PLANS AND ESTIMATES PREPARED BY:

BLACK & VEATCH Building a world of difference. Black & Veatch Corporation Kansas City, Missouri

Holloway, Updike and Bellon Consulting Engineers Muskogee · Broken Arrow

DWGATES Consulting Engineering Services

STATE OF OKLAHOMA LOUIS E. NEWPORT 5784 LICENSED ARCHITECT 09/23/2011

REVISION	BY	DATE

PLAN SCALE:	DRAWN	TMB	APPROVED:
	DESIGNED	PDR	
	SURVEY		
PROFILE SCALE:	FIELD MGR.	TOB 10/11	
HORIZONTAL: 1" =	SECT. MGR.		
	PROJ. MGR.	RDV 10/27/11	
VERTICAL 1" =	RECOMMENDED: HAS 10/30/11		DIRECTOR
FILE: AA-01	DRAWING: AA-1		DATE 10/28/2011
ATLAS PAGE NO:			SHEET 167 OF 261 SHEETS

JBS 9-28-11

B&V PROJECT NO. 145120

PLOTTED DATE: EDM17043, 9/21/2011 8:30:21 AM
SAVED DATE: EDM17043, 9/20/2011 1:49:37 PM
CYGNET ID: 145120-3000-A-B000CS805

FD145120
D145120BV

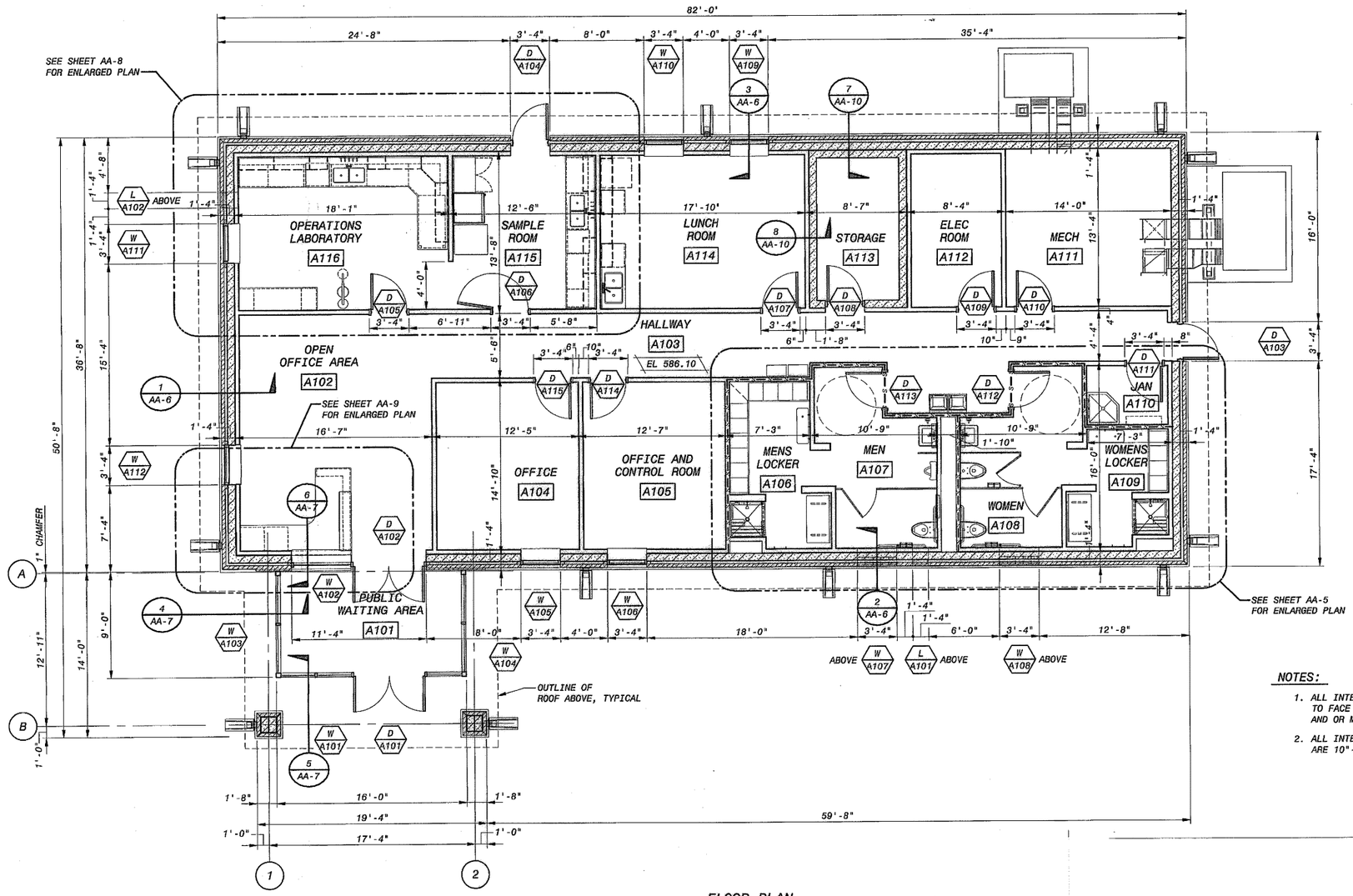

FLOOR PLAN

3/16" = 1'-0"

NOTES:

1. ALL INTERIOR DIMENSIONS ARE TO FACE OF METAL STUDS AND OR MASONRY
2. ALL INTERIOR STUD WALL HEIGHTS ARE 10"-0" UNLESS NOTED OTHERWISE

6' 4' 2' 0 5' 10'

3/16"=1'-0"

LOWER BIRD CREEK WWTP EXPANSION
TMUA PROJECT NO. ES 2006-01
CONTRACT 1B

OPERATIONS BUILDING
ARCHITECTURAL
FLOOR PLAN

CITY OF TULSA, OKLAHOMA
TULSA METROPOLITAN UTILITY AUTHORITY
ENGINEERING SERVICES DEPARTMENT

PLANS AND ESTIMATES PREPARED BY:

BLACK & VEATCH Building a world of difference
Black & Veatch Corporation Kansas City, Missouri

Holloway, Updike and Bolton Consulting Engineers Muskogee · Broken Arrow

CH2M HILL Engineering Services

STATE OF OKLAHOMA
LOUIS E. ALEXANDER
A5784
LICENSED ARCHITECT
09/23/2011

REVISION	BY	DATE

PLAN SCALE:	DRAWN	MDE		APPROVED:
	DESIGNED	PDR		
	SURVEY			
PROFILE SCALE:	FIELD MGR.	TOS	10/11	
HORIZONTAL: 1" =	SECT. MGR.			
	PROJ. MGR.	BGV	10/5/11	
VERTICAL 1" =	RECOMMENDED: HBS 10/30/11			DIRECTOR
FILE: AA-02	DRAWING: AA-2			DATE 10/28/2011
ATLAS PAGE NO:				SHEET 168 OF 261 SHEETS

9-28-11 B&V PROJECT NO. 145120

PLOTTED DATE: EDM17043, 9/21/2011 8:31:20 AM
SAVED DATE: EDM17043, 9/21/2011 8:36:00 AM
CYGNET ID: 145120-3000-A-B00003SF

FD145120
D145120BV

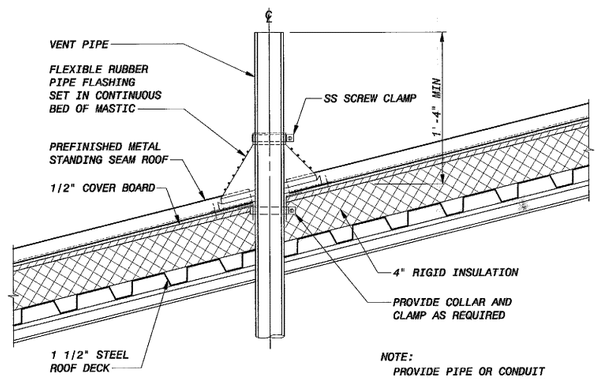

NOTE:
PROVIDE PIPE OR CONDUIT SUPPORT BELOW ROOF DECK WHEN UNSUPPORTED LENGTH BELOW ROOF EXCEEDS 5'-0"

DETAIL A / AA-3
1 1/2" = 1'-0"

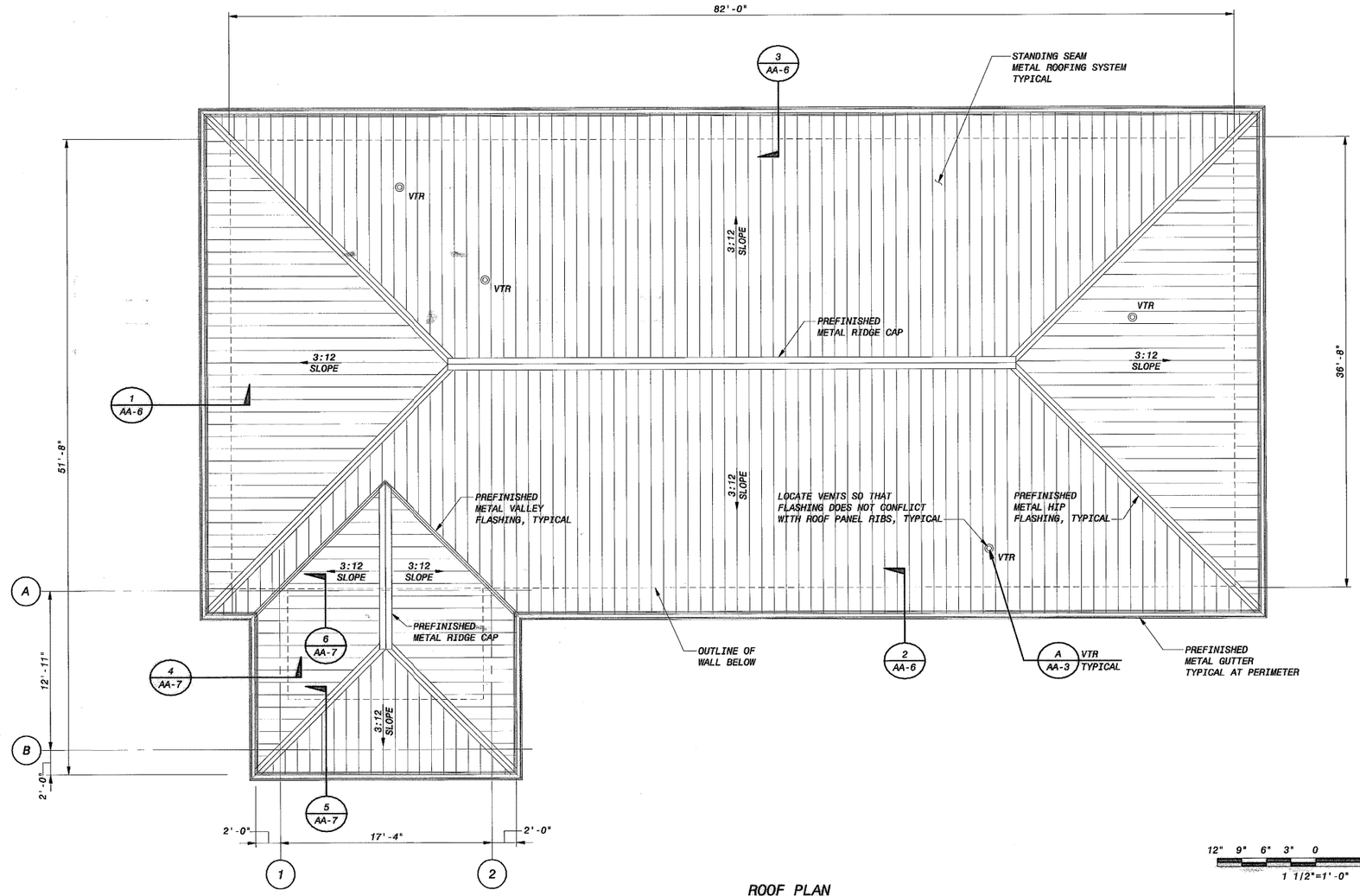

ROOF PLAN
3/16" = 1'-0"

12" 9" 6" 3" 0 1'
1 1/2"=1'-0"

6' 4' 2' 0 5' 10'
3/16"=1'-0"

LOWER BIRD CREEK WWTP EXPANSION
TMUA PROJECT NO. ES 2006-01
CONTRACT 1B

OPERATIONS BUILDING
ARCHITECTURAL
ROOF PLAN

CITY OF TULSA, OKLAHOMA
TULSA METROPOLITAN UTILITY AUTHORITY
ENGINEERING SERVICES DEPARTMENT

PLANS AND ESTIMATES PREPARED BY:
BLACK & VEATCH Building a world of difference. Black & Veatch Corporation Kansas City, Missouri
Holloway, Updike and Bellen Consulting Engineers Muskogee · Broken Arrow
OWGATES Engineering Services

STATE OF OKLAHOMA
ROLLIS E. DENTON
A5784
LICENSED ARCHITECT
09/23/2011

REVISION	BY	DATE

PLAN SCALE:	DRAWN	TMB		APPROVED:
	DESIGNED	PDR		
	SURVEY			
PROFILE SCALE:	FIELD MGR.	TMB	10/11	
HORIZONTAL: 1" =	SECT. MGR.			
	PROJ. MGR.	RBV	10/31/11	
VERTICAL 1" =	RECOMMENDED: HAS 10/20/11			DIRECTOR
FILE: AA-03	DRAWING: AA-3			DATE 10/28/2011
ATLAS PAGE NO:				SHEET 169 OF 261 SHEETS

9-28-11 B&V PROJECT NO. 145120

PLOTTED DATE: EDM17043, 9/21/2011 8:31:57 AM
SAVED DATE: EDM17043, 9/20/2011 1:57:02 PM
CTGNE, T ID: 145120-3000-A-B000035WS

FD145120
D145120BV

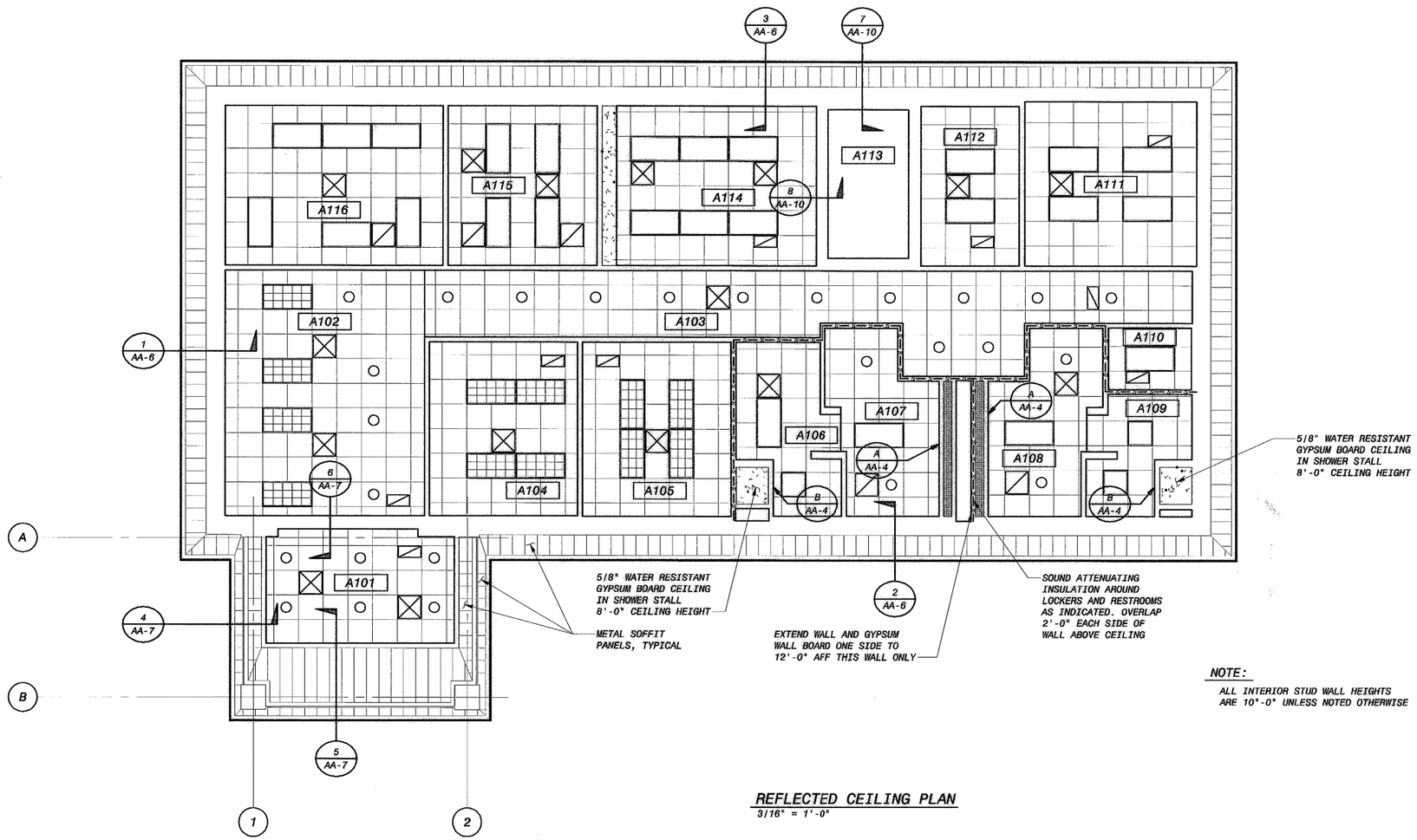

REFLECTED CEILING PLAN

3/16" = 1'-0"

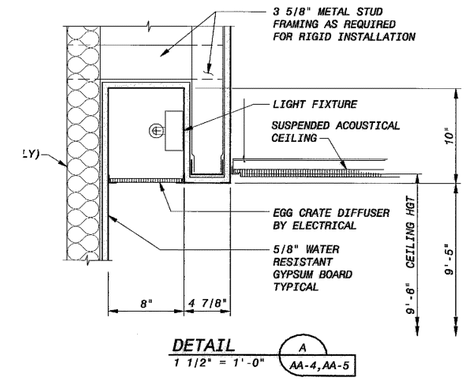

DETAIL A
1 1/2" = 1'-0"
AA-4,AA-5

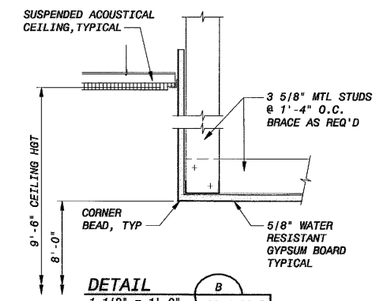

DETAIL B
1 1/2" = 1'-0"
AA-4,AA-5

LEGEND

LIGHT FIXTURES

EXHAUST DIFFUSER / RETURN DIFFUSER

SUPPLY DIFFUSER

NOTE:

ALL INTERIOR STUD WALL HEIGHTS ARE 10'-0" UNLESS NOTED OTHERWISE

12" 9" 6" 3" 0 1'
1 1/2"=1'-0"

6' 4' 2' 0 5' 10'
3/16"=1'-0"

LOWER BIRD CREEK WWTP EXPANSION
TMUA PROJECT NO. ES 2006-01
CONTRACT 1B

OPERATIONS BUILDING
ARCHITECTURAL
REFLECTED CEILING PLAN AND DETAILS

CITY OF TULSA, OKLAHOMA
TULSA METROPOLITAN UTILITY AUTHORITY
ENGINEERING SERVICES DEPARTMENT

PLANS AND ESTIMATES PREPARED BY:

BLACK & VEATCH Building a world of difference
Black & Veatch Corporation
Kansas City, Missouri

Holloway, Updike and Bellen
Consulting Engineers
Muskogee · Broken Arrow

DWGATES Engineering Services

STATE OF OKLAHOMA
LOUIS E. HOLLOWAY
A5784
LICENSED ARCHITECT
09/23/2011

REVISION	BY	DATE

PLAN SCALE:	DRAWN	MDE	APPROVED:
	DESIGNED	PDR	
	SURVEY		
PROFILE SCALE:	FIELD MGR.	TOB 10/11	
HORIZONTAL: 1" =	SECT. MGR.		
	PROJ. MGR.	RBN 10/31/11	
VERTICAL 1" =	RECOMMENDED: HBJ 10/30/11		DIRECTOR
FILE: AA-04	DRAWING: AA-4		DATE 10/28/2011
ATLAS PAGE NO:			SHEET 170 OF 261 SHEETS

B&V PROJECT NO. 145120

PLOTTED DATE: EDW17043, 9/21/2011 8:32:30 AM
SAVED DATE: EDW17043, 9/20/2011 2:03:10 PM
C:\CNET 16\145120-000\A-AA04.DWG
ED145120
D145120BV

BB 9-28-11

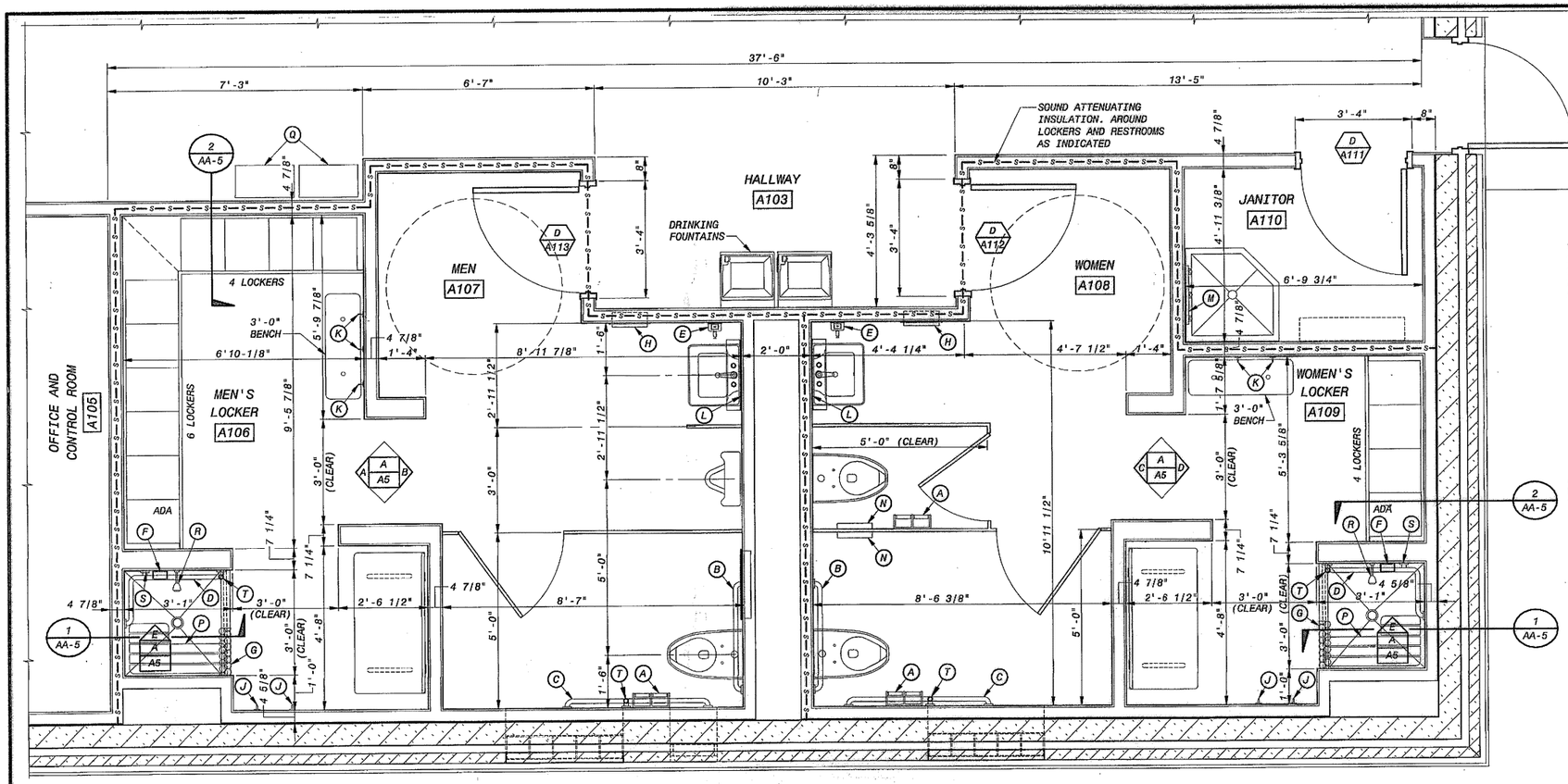

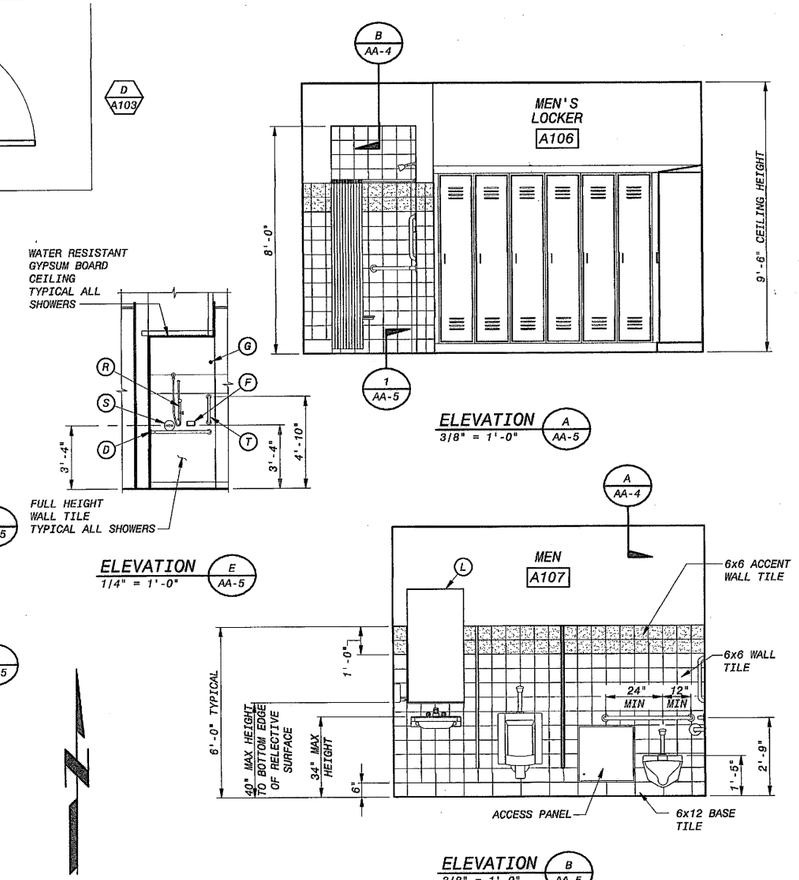

ACCESSORY SCHEDULE			
QTY	ID	ITEM	MOUNTING HEIGHT
3	A	SURFACE MOUNTED TOILET PAPER HOLDER	2'-4"
2	B	36" GRAB BAR	CL 2'-9"
2	C	48" GRAB BAR	CL 2'-9"
2	D	TWO-WALL GRAB BAR	CL 2'-9"
2	E	AUTOMATIC SOAP DISPENSER	3'-4" TO BOTTOM
2	F	SURFACE MOUNTED SOAP HOLDER	3'-4" TO BOTTOM
2	G	SHOWER CURTAIN, HOOKS AND ROD	6'-6" AFF
2	H	AUTOMATIC ROLL PAPER TOWEL DISPENSER AND WASTE RECEPTACLE	4'-0" AFF TO BOTTOM OF UNIT
4	J	TOWEL PIN (ONE ADA AT EACH SHOWER)	5'-0" AFF 4'-0" AFF ADA
5	K	HAT AND COAT HOOK	5'-0" AFF
2	L	FRAMED MIRROR 24" x 48"	3'-4" TO BOTTOM OF REFLECTIVE SURFACE
1	M	24" MOP AND BROOM HOLDER	6'-0" AFF
2	N	PARTITION MOUNTED SANITARY NAPKIN DISPENSER	2'-6" AFF
2	P	SHOWER SEAT	18" AFF
2	Q	WASTE AND RECYCLE RECEPTACLES	-
2	R	ADA HAND SHOWER W/ SLIDE BAR	3'-8" TO BOTTOM OF SLIDE BAR
2	S	SHOWER VALVE	CL 3'-4" AFF
4	T	18" VERTICAL GRAB BAR	CL 4'-10" AFF

W A107 L A101 W A108

ENLARGED RESTROOM PLAN
1/2" = 1'-0"

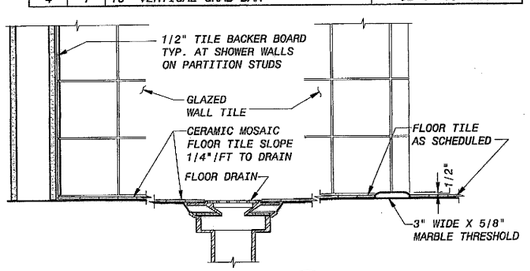

SECTION
1 1/2" = 1'-0"
1 AA-5

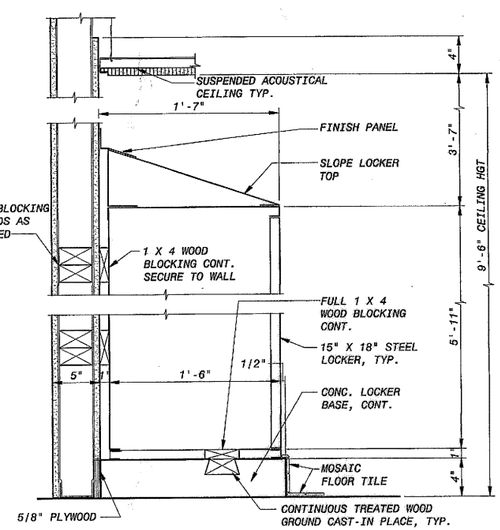

SECTION
1 1/2" = 1'-0"
2 AA-5

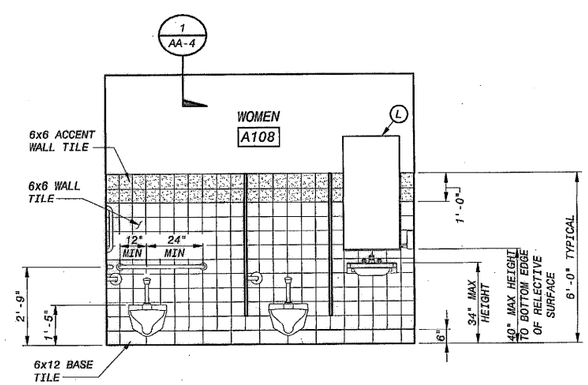

ELEVATION
3/8" = 1'-0"
C AA-5

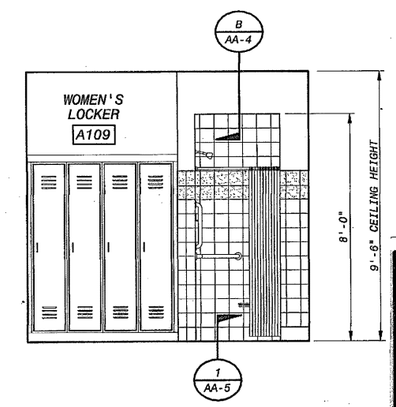

ELEVATION
3/8" = 1'-0"
D AA-5

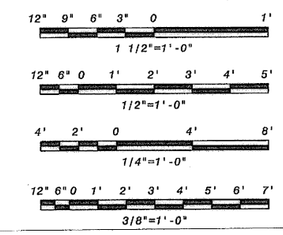

LOWER BIRD CREEK WWTP EXPANSION
TMUA PROJECT NO. ES 2006-01
CONTRACT 1B

OPERATIONS BUILDING
ARCHITECTURAL
ENLARGED RESTROOM AND LOCKER ROOM

CITY OF TULSA, OKLAHOMA
TULSA METROPOLITAN UTILITY AUTHORITY
ENGINEERING SERVICES DEPARTMENT

PLANS AND ESTIMATES PREPARED BY:

BLACK & VEATCH Building a world of difference. Black & Veatch Corporation Kansas City, Missouri

Holloway, Updike and Bolton Consulting Engineers Muskogee · Broken Arrow

GH GATES Engineering Services

STATE OF OKLAHOMA LOUIS E. HEMMING A5764 LICENSED ARCHITECT 09/23/2011

REVISION	BY	DATE

PLAN SCALE:	DRAWN	MDE	APPROVED:
	DESIGNED	PDR	
	SURVEY		
PROFILE SCALE:	FIELD MGR.	TOB 10/11	
HORIZONTAL: 1" =	SECT. MGR.		
	PROJ. MGR.	PDW 10/5/11	
VERTICAL 1" =	RECOMMENDED: HAS 10/20/11		DIRECTOR
FILE: AA-05	DRAWING: AA-5		DATE 10/28/2011
ATLAS PAGE NO:			SHEET 171 OF 261 SHEETS

B&V PROJECT NO. 145120

9-28-11

PLOTTED DATE: EDM17043, 9/21/2011 8:33:19 AM
SAVED DATE: EDM17043, 9/20/2011 2:06:17 PM
CYBNET: 180-145120-30020-A-000005WIN

FD145120
DI157209

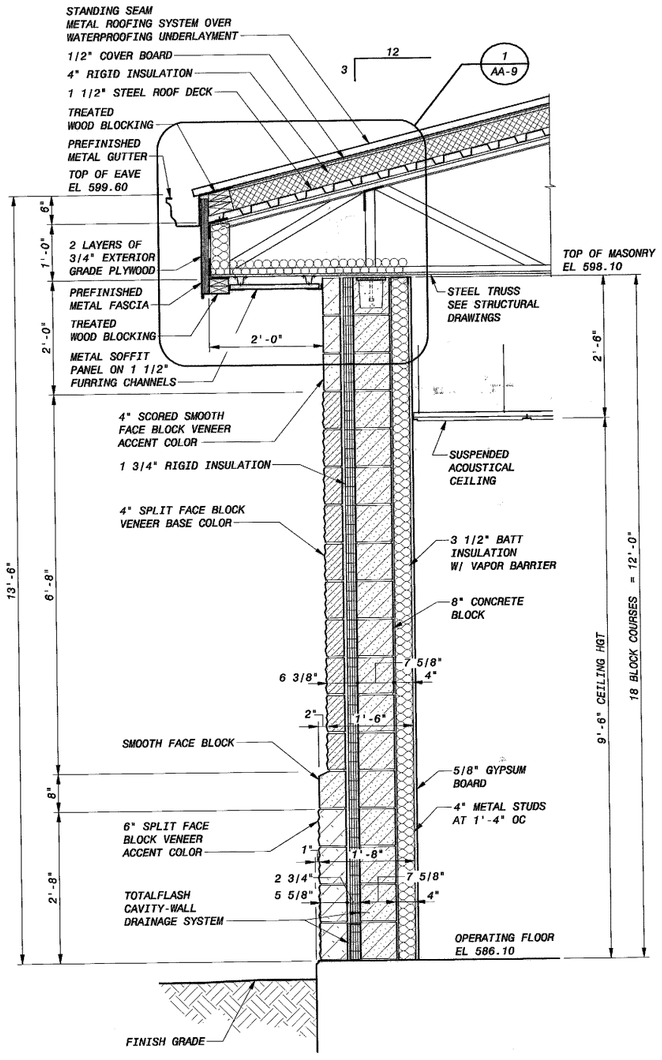

SECTION 1
3/4" = 1'-0"
AA-1,AA-2,AA-3,AA-4

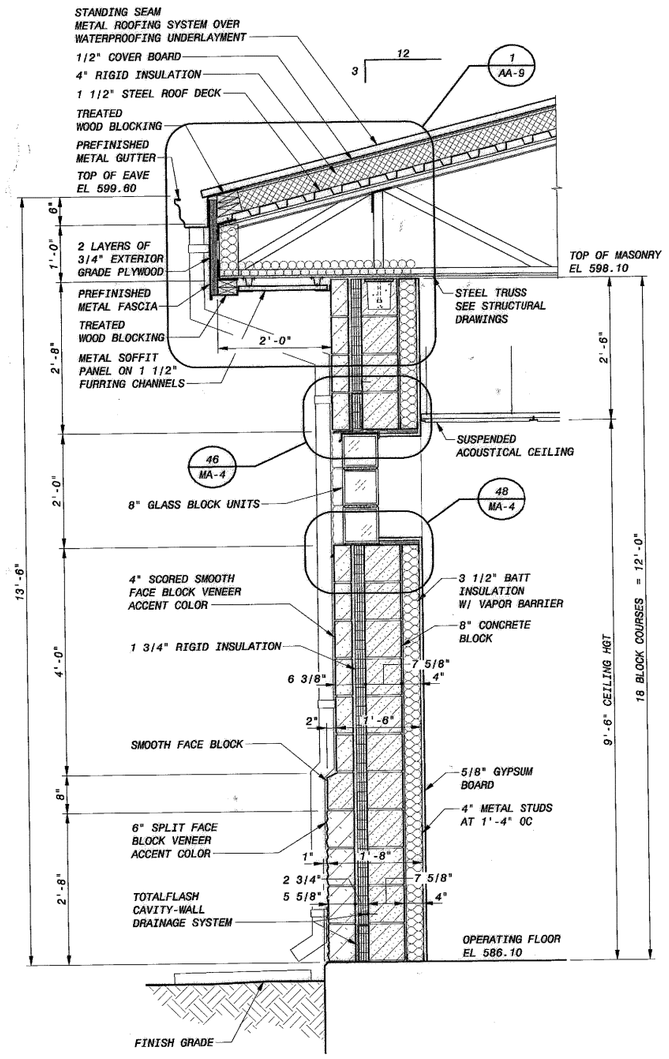

SECTION 2
3/4" = 1'-0"
AA-1,AA-2,AA-3,AA-4

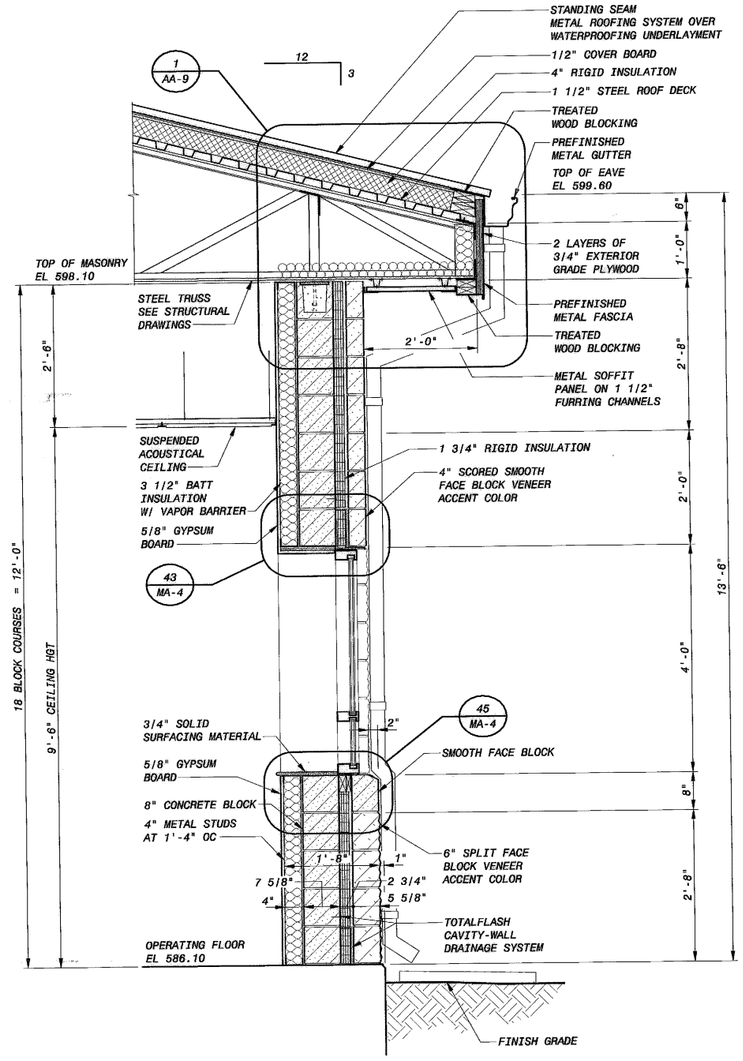

SECTION 3
3/4" = 1'-0"
AA-1,AA-2,AA-3,AA-4

NOTES:

1. FOR VERTICAL REINFORCING, BOND BEAM LOCATIONS AND WALL PENETRATIONS, SEE STRUCTURAL DRAWINGS
2. SEE SPECIFICATION SECTION 04200 BUILDING MASONRY FOR HORIZONTAL JOINT REINFORCING

12" 6" 0 1' 2' 3'
3/4"=1'-0"

REVISION	BY	DATE

STATE OF OKLAHOMA LOUIS E. ALEXANDER A5784 LICENSED ARCHITECT 09/23/2011

LOWER BIRD CREEK WWTP EXPANSION
TMUA PROJECT NO. ES 2006-01
CONTRACT 1B

OPERATIONS BUILDING
ARCHITECTURAL
WALL SECTIONS

CITY OF TULSA, OKLAHOMA
TULSA METROPOLITAN UTILITY AUTHORITY
ENGINEERING SERVICES DEPARTMENT

PLANS AND ESTIMATES PREPARED BY:

BLACK & VEATCH Building a world of difference. Black & Veatch Corporation Kansas City, Missouri

Holloway, Updike and Bellen Consulting Engineers Muskogee · Broken Arrow

BURGATES Engineering Services

PLAN SCALE:	DRAWN	MDE		APPROVED:
	DESIGNED	PDR		
	SURVEY			
PROFILE SCALE:	FIELD MGR.	JDB	10/11	
HORIZONTAL: 1" =	SECT. MGR.			
	PROJ. MGR.	RBV	10/5/11	
VERTICAL 1" =	RECOMMENDED: HAS 10/30/11			DIRECTOR
FILE: AA-06	DRAWING: AA-6			DATE 10/28/2011
ATLAS PAGE NO:				SHEET 172 OF 261 SHEETS

JBB 9-28-11

B&V PROJECT NO. 145120

PLOTTED DATE: EDW17043, 6/16/2011 8:37:42 AM
SAVED DATE: EDW17043, 9/20/2011 2:38:13 PM
SYSNET ID: K45120-3000-A-B0000SW79

FD145120
D/S-252089

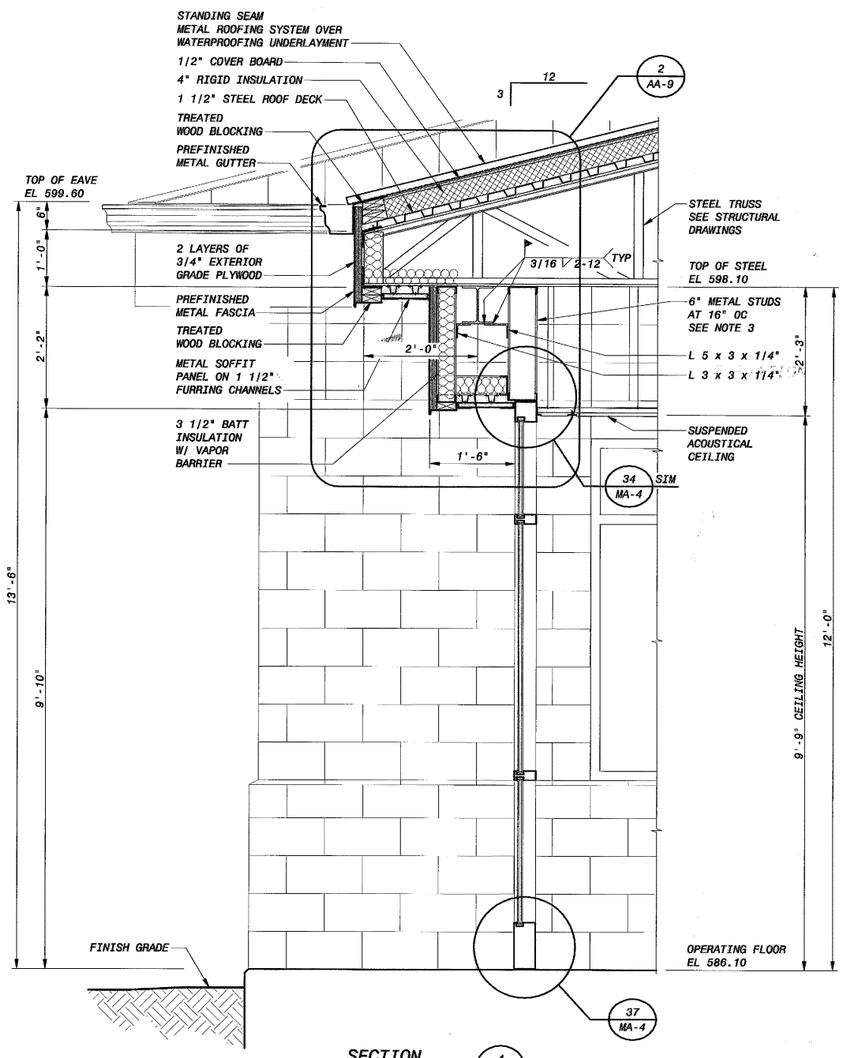

SECTION 4
3/4" = 1'-0"
AA-1,AA-2,AA-3,AA-4

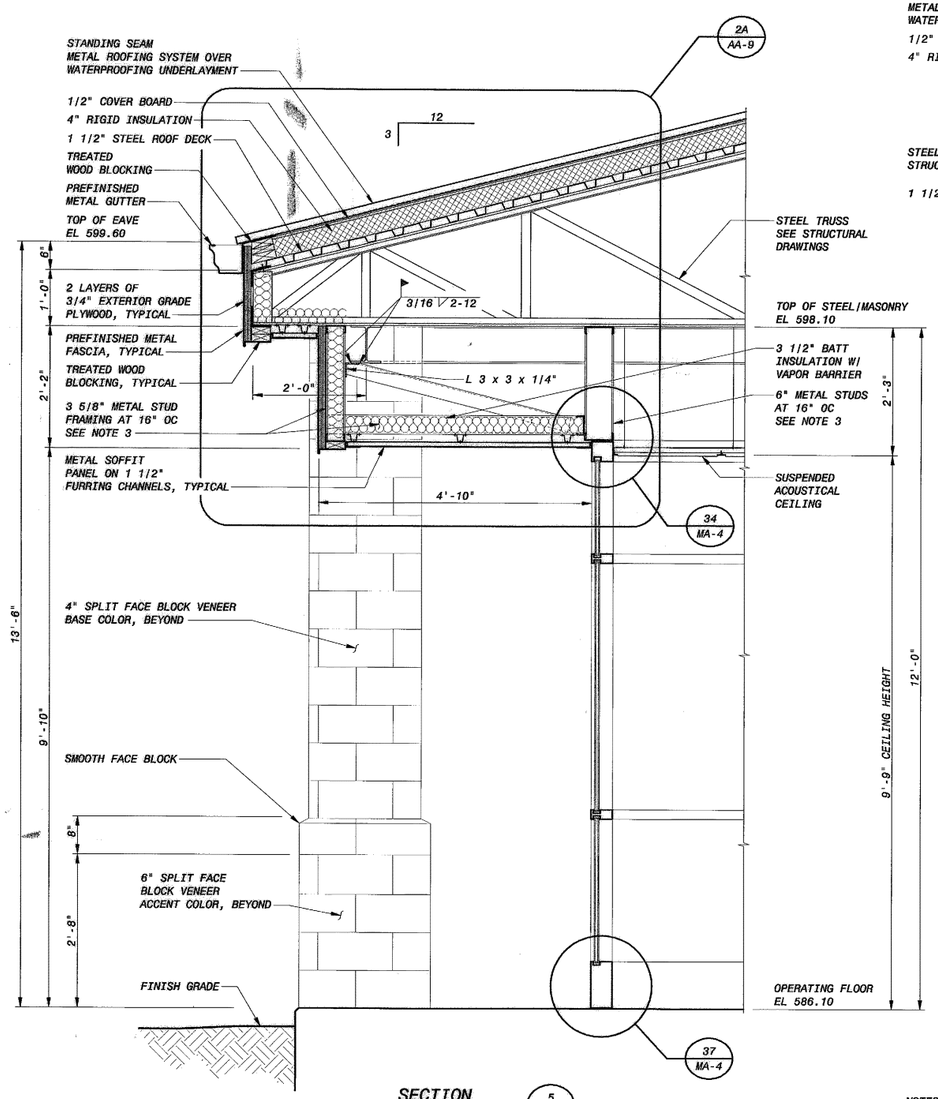

SECTION 5
3/4" = 1'-0"
AA-1,AA-2,AA-3,AA-4

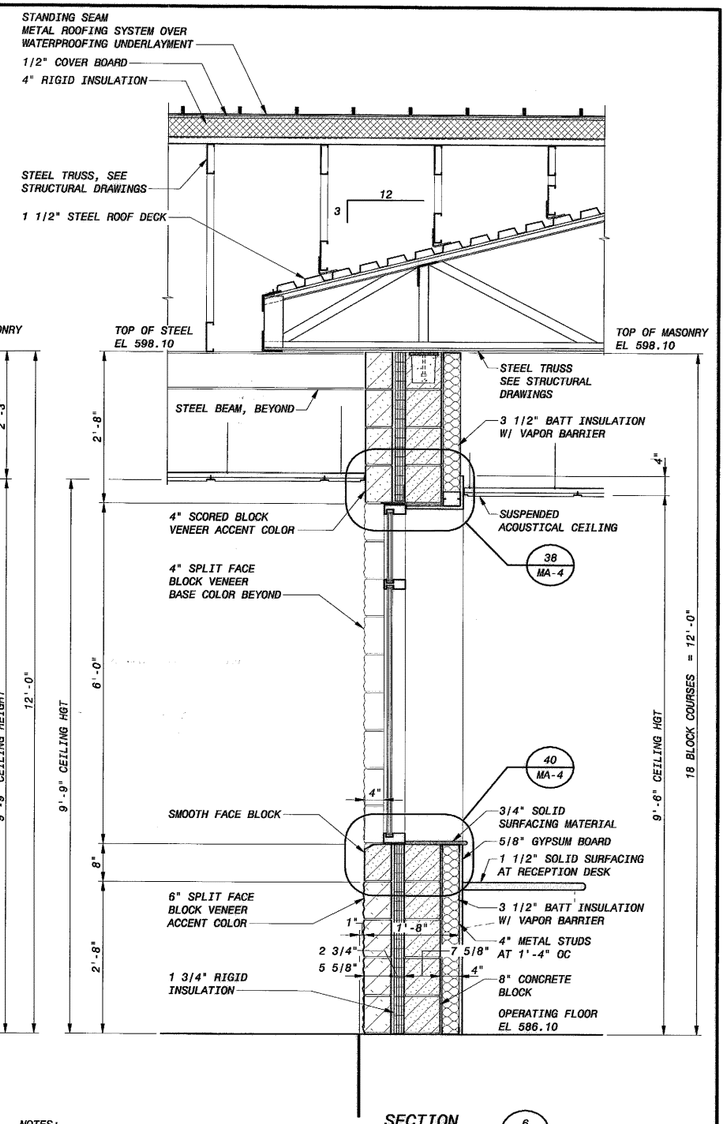

SECTION 6
3/4" = 1'-0"
AA-2,AA-3,AA-4,AA-9

NOTES:

1. FOR BOND BEAMS AND WALL REINFORCING, SEE STRUCTURAL DRAWINGS
2. SEE SPECIFICATION SECTION 04200 BUILDING MASONRY FOR HORIZONTAL JOINT REINFORCING
3. CONTRACTOR SHALL DESIGN LIGHT GAUGE FRAMING PER SECTION 05400

12" 6" 0 1' 2' 3'
3/4"=1'-0"

STATE OF OKLAHOMA
ALLISE E. ALLEN
A5784
LICENSED ARCHITECT
09/23/2011

REVISION	BY	DATE

LOWER BIRD CREEK WWTP EXPANSION
TMUA PROJECT NO. ES 2006-01
CONTRACT 1B

OPERATIONS BUILDING
ARCHITECTURAL
WALL SECTIONS

CITY OF TULSA, OKLAHOMA
TULSA METROPOLITAN UTILITY AUTHORITY
ENGINEERING SERVICES DEPARTMENT

PLANS AND ESTIMATES PREPARED BY:

BLACK & VEATCH Building a world of difference. Black & Veatch Corporation Kansas City, Missouri

Holloway, Updike and Bellan Consulting Engineers Muskogee · Broken Arrow

DUGATES Engineering Service

PLAN SCALE:	DRAWN	MDE		APPROVED:
	DESIGNED	PDR		
	SURVEY			
PROFILE SCALE:	FIELD MGR.	TJB	10/11	
HORIZONTAL: 1" =	SECT. MGR.			
	PROJ. MGR.		10/3/11	
VERTICAL 1" =	RECOMMENDED:		10/20/11	DIRECTOR
FILE: AA-07	DRAWING: AA-7			DATE 10/28/2011
ATLAS PAGE NO:				SHEET 173 OF 261 SHEETS

9-28-11

B&V PROJECT NO. 145120

PLOTTED DATE: EDW17043, 6/16/2011 8:36:28 AM
SAVED DATE: EDW17043, 9/20/2011 2:09:45 PM
C:\DWET ID: 145120-2000-A-B000DS1.DWF

FD145120
D145120BV

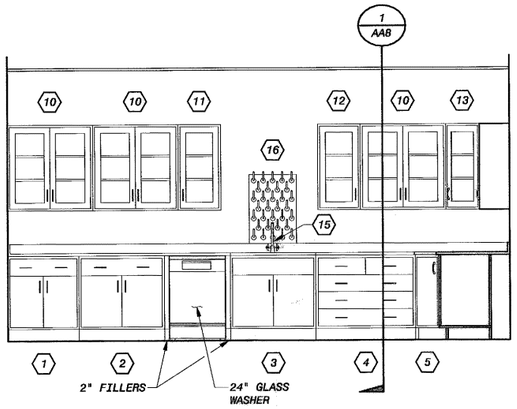

ELEVATION A AA-8
3/8" = 1'-0"

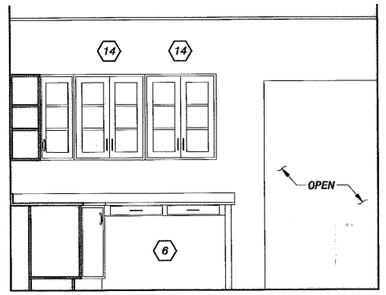

ELEVATION B AA-8
3/8" = 1'-0"

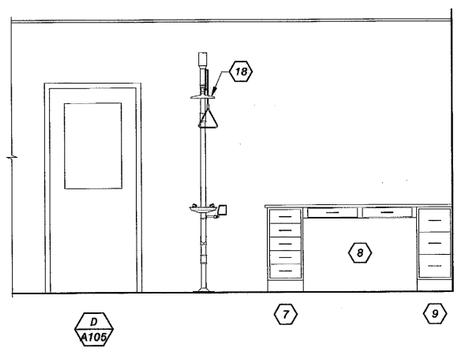

ELEVATION C AA-8
3/8" = 1'-0"

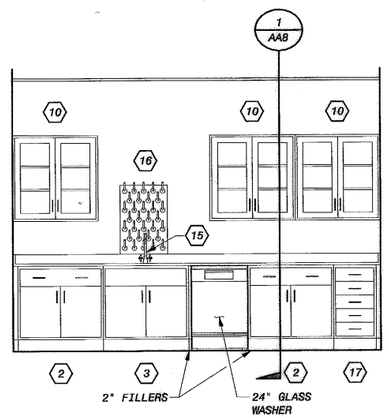

ELEVATION D AA-8
3/8" = 1'-0"

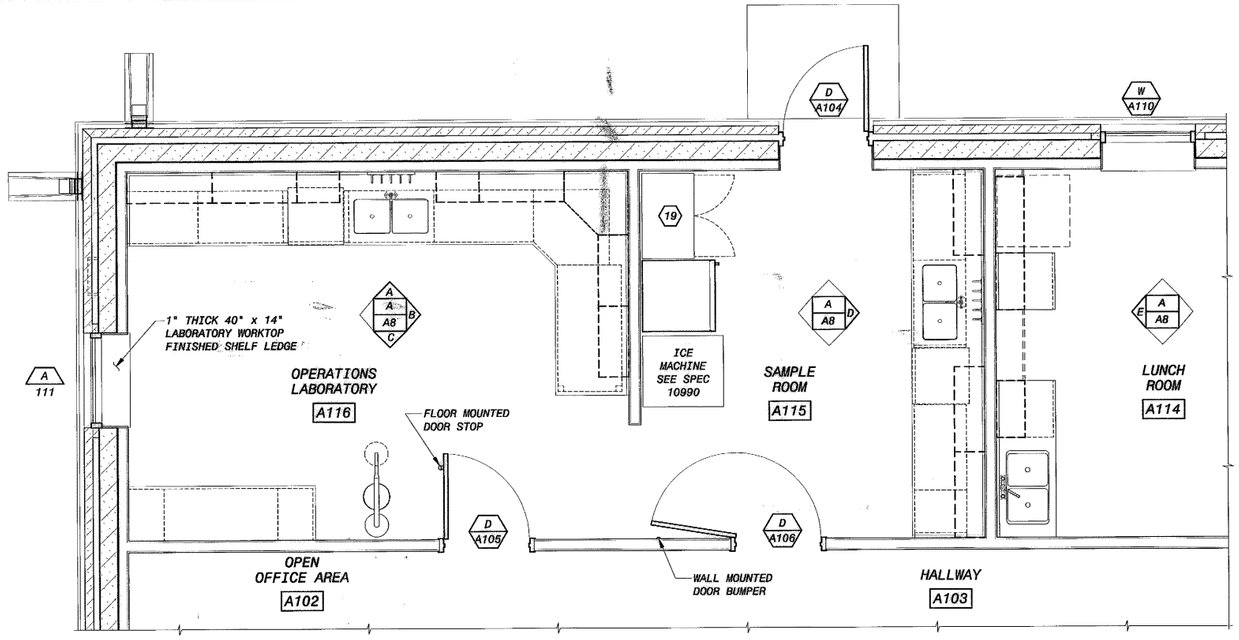

ENLARGED LABORATORY PLAN
3/8" = 1'-0"

LABORATORY CABINET SCHEDULE					
Quantity	CAB No.	MFR	MODEL No.	DESCRIPTION	REMARKS
1	1	KEWAUNEE	E41W362230-5212	CUPBOARD AND DRAWER CABINET	
3	2	KEWAUNEE	E41W362236-5212	CUPBOARD AND DRAWER CABINET	
2	3	KEWAUNEE	G00W362236-5212	SINK CABINET	
1	4	KEWAUNEE	D31W362242-5212	DRAWER CABINET	
1	5	KEWAUNEE	G14W362215-5212	DIAGONAL CORNER CABINET	NO LAZY SUSAN
1	6	KEWAUNEE	A18W052854-5012	APRON	WITH LEG ASSEMBLY (A21W3628-0010)
1	7	KEWAUNEE	D50W362215-5012	DRAWER CABINET	
1	8	KEWAUNEE	A02W052248-5012	APRON	
1	9	KEWAUNEE	D00W362215-5012	DRAWER CABINET	
6	10	KEWAUNEE	W20W361236-5212	WALL MOUNTED STORAGE CABINET	
1	11	KEWAUNEE	W20W361218-5212	WALL MOUNTED STORAGE CABINET	
1	12	KEWAUNEE	W20W361218L-5212	WALL MOUNTED STORAGE CABINET	
1	13	KEWAUNEE	W21W361217-5212	DIAGONAL WALL MOUNTED STORAGE CABINET	
2	14	KEWAUNEE	W20W361230-5212	WALL MOUNTED STORAGE CABINET	
2	15	KEWAUNEE	W-0340-OV	DECK MOUNTED H&C WATER MIXING VACUUM BREAKER GOOSENECK FAUCET	
2	16	KEWAUNEE	X-020014	COMPOSITE RESIN LABORATORY PEGBOARD	20" X 30" WITH DRIP TROUGH
1	17	KEWAUNEE	D50W362218-5012	DRAWER CABINET	
1	18	KEWAUNEE	W-0936-00	DRENCH SHOWER AND EYE WASH COMBINATION	
1	19	KEWAUNEE	S30W842230	STEEL FULL HEIGHT STORAGE CABINET	

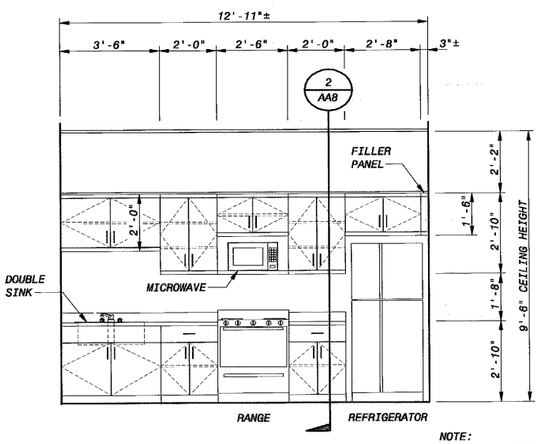

ELEVATION E AA-8
3/8" = 1'-0"

NOTE:
SEE SPEC 10990
FOR KITCHEN APPLIANCES

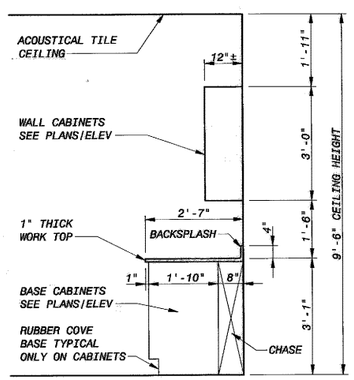

SECTION 1 AA-8
1/2" = 1'-0"

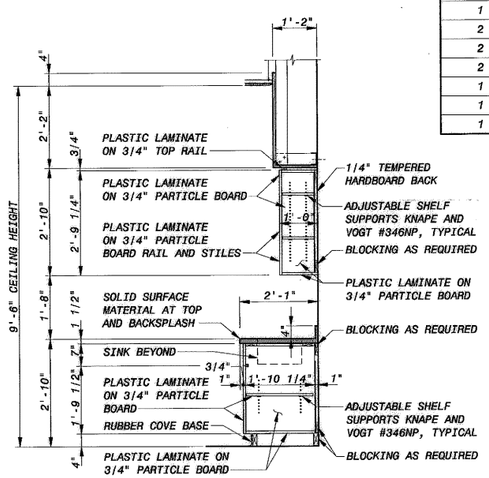

SECTION 2 AA-8
1/2" = 1'-0"

12" 6" 0 1' 2' 3' 4' 5'
1/2"=1'-0"

12" 6" 0 1' 2' 3' 4' 5' 6' 7'
3/8"=1'-0"

LOWER BIRD CREEK WWTP EXPANSION
TMUA PROJECT NO. ES 2006-01
CONTRACT 1B

OPERATIONS BUILDING
ARCHITECTURAL
ENLARGED LABORATORY PLAN, SECTS & ELEVS

CITY OF TULSA, OKLAHOMA
TULSA METROPOLITAN UTILITY AUTHORITY
ENGINEERING SERVICES DEPARTMENT

PLANS AND ESTIMATES PREPARED BY:

BLACK & VEATCH Building a world of difference
Black & Veatch Corporation Kansas City, Missouri
Holloway, Updike and Bailey Consulting Engineers Muskogee • Broken Arrow
SWGATES Engineering Services

STATE OF OKLAHOMA LICENSED ARCHITECT ACLISE E. NEWMAN A5784 09/23/2011

REVISION	BY	DATE

PLAN SCALE:	DRAWN	MDE	APPROVED:
	DESIGNED	PDR	
	SURVEY		
PROFILE SCALE:	FIELD MGR.	TOS 10/11	
HORIZONTAL: 1" =	SECT. MGR.		
	PROJ. MGR.	ZBW 10/13/11	
VERTICAL 1" =	RECOMMENDED:	HAS 10/30/11	DIRECTOR
FILE: AA-08	DRAWING: AA-8		DATE 10/28/2011
ATLAS PAGE NO:			SHEET 174 OF 261 SHEETS

JBB 9-28-11

B&V PROJECT NO. 145120

PLOTTED DATE: EDM17043, 6/16/2011 8:39:44 AM
SAVED DATE: EDM17043, 9/20/2011 2:11:51 PM
CYGNET ID: 145120-3000-A-B0003WIX

FD145120
D145120EV

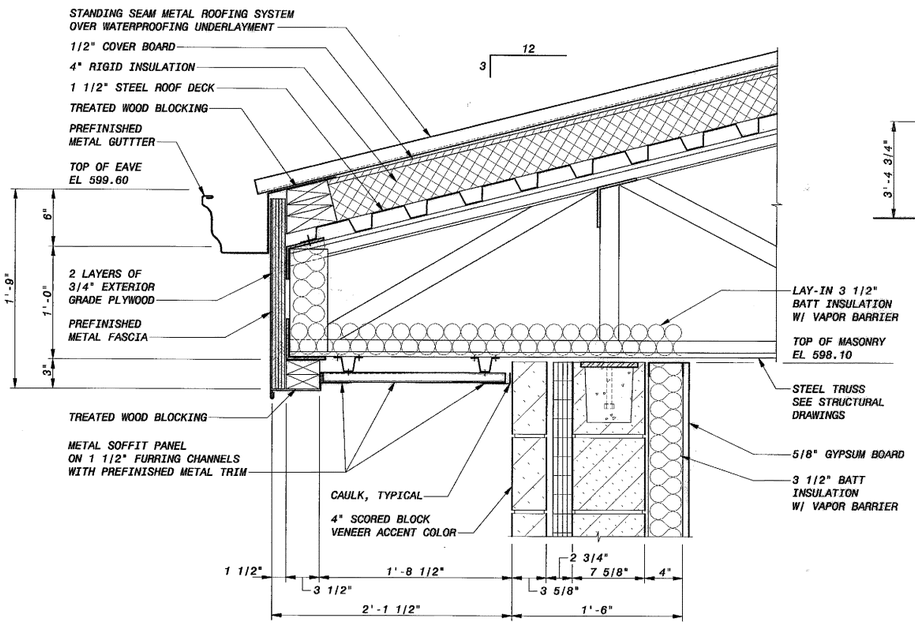

DETAIL 1 / AA-6
1 1/2" = 1'-0"

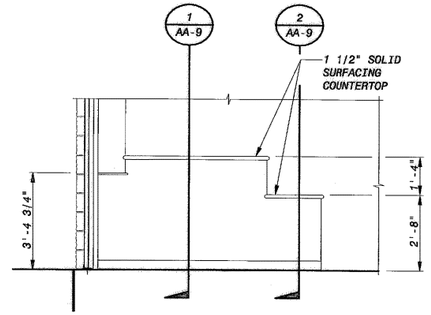

ELEVATION A / AA-9
3/8" = 1'-0"

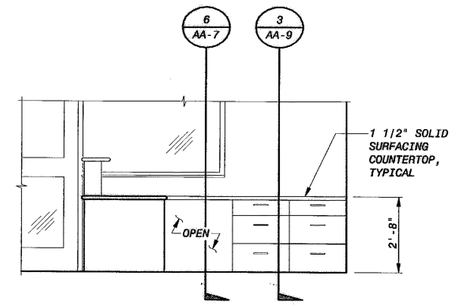

ELEVATION B / AA-9
3/8" = 1'-0"

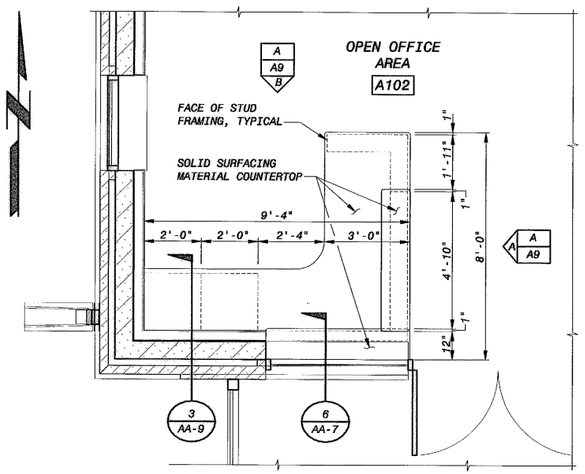

ENLARGED RECEPTION DESK PLAN
3/8" = 1'-0"

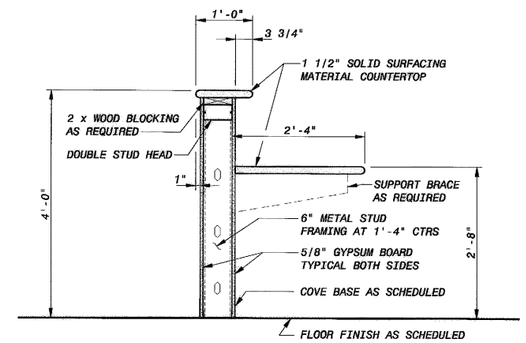

SECTION 1 / AA-9
3/4" = 1'-0"

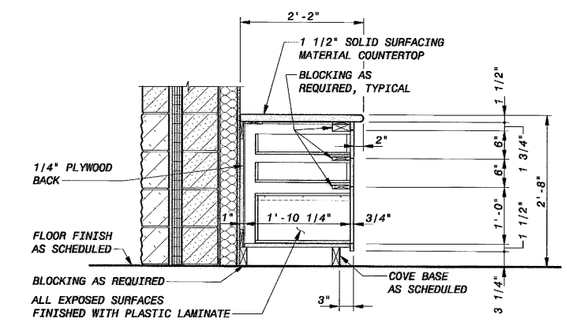

SECTION 3 / AA-9
3/4" = 1'-0"

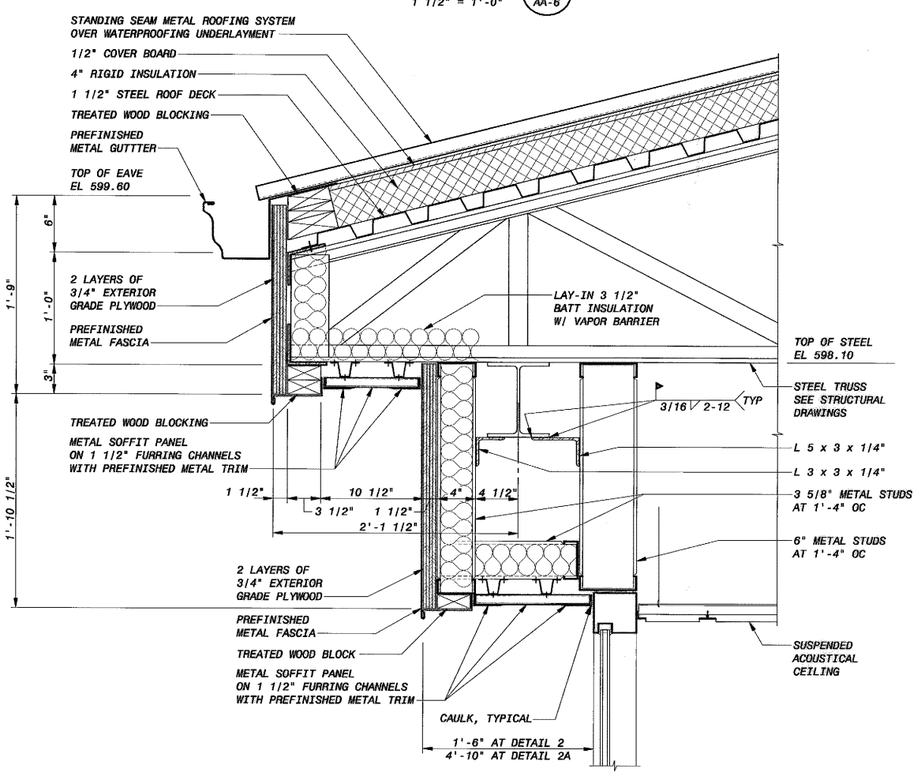

DETAIL 2 / AA-7 2A / AA-7
1 1/2" = 1'-0"

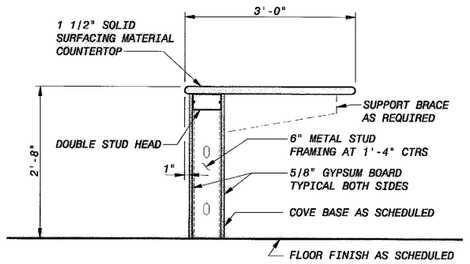

SECTION 2 / AA-9
3/4" = 1'-0"

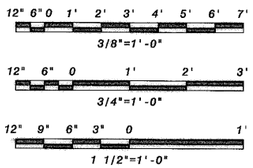

LOWER BIRD CREEK WWTP EXPANSION
TMUA PROJECT NO. ES 2006-01
CONTRACT 1B

OPERATIONS BUILDING
ARCHITECTURAL
ENLARGED RECEPT PLAN, SECTS & ROOF DTLS

CITY OF TULSA, OKLAHOMA
TULSA METROPOLITAN UTILITY AUTHORITY
ENGINEERING SERVICES DEPARTMENT

PLANS AND ESTIMATES PREPARED BY:

BLACK & VEATCH Building a world of difference
Black & Veatch Corporation Kansas City, Missouri
Holloway, Updike and Bollen Consulting Engineers Muskogee · Broken Arrow
SMGATES Engineering Services

STATE OF OKLAHOMA
ACHIS E. NEWMAN
A5784
LICENSED ARCHITECT
09/23/2011

REVISION	BY	DATE

PLAN SCALE:	DRAWN	MDE	APPROVED:
	DESIGNED	PDR	
	SURVEY		
PROFILE SCALE:	FIELD MGR.	TDS 10/11	
HORIZONTAL: 1" =	SECT. MGR.		
	PROJ. MGR.	PDW 10/5/11	
VERTICAL 1" =	RECOMMENDED:	HDS 10/30/11	DIRECTOR
FILE: AA-09	DRAWING: AA-9		DATE 10/28/2011
ATLAS PAGE NO:			SHEET 175 OF 261 SHEETS

HDS 9-28-11 B&V PROJECT NO. 145120

PLOTTED DATE: EDM17043, 6/16/2011 8:46:29 AM
SAVED DATE: EDM17043, 9/20/2011 2:13:28 PM
CADNET ID/: 145120-3000-A-B000W89F

FD145120
D145120BV

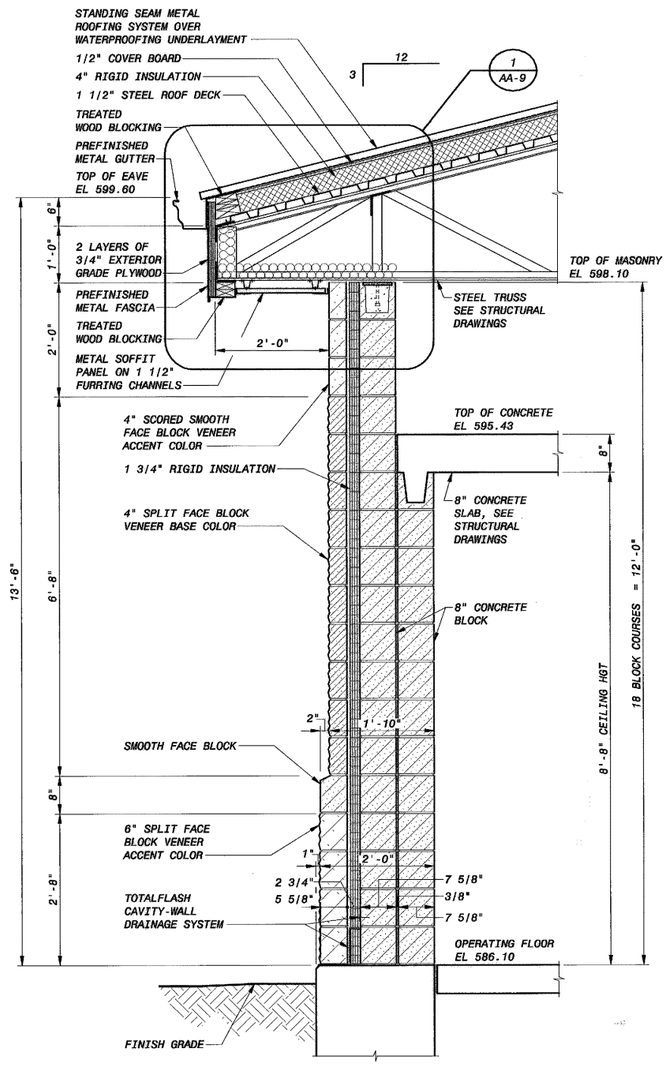

SECTION 7 / AA-2,AA-4
3/4" = 1'-0"

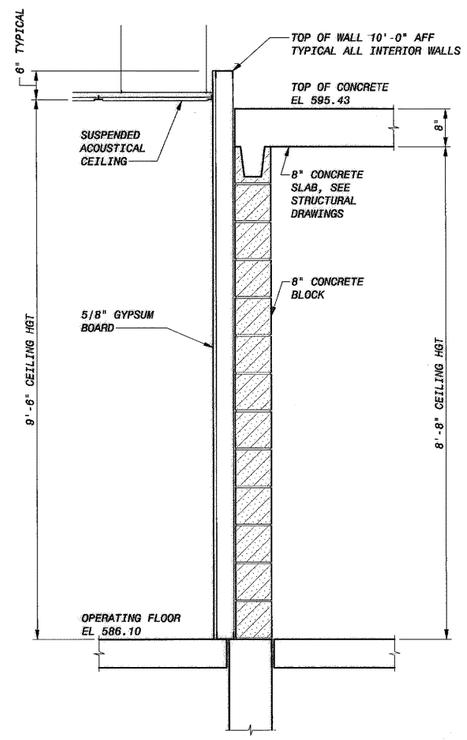

SECTION 8 / AA-2,AA-4
3/4" = 1'-0"

NOTES:

1. FOR VERTICAL REINFORCING, BOND BEAM LOCATIONS AND WALL PENETRATIONS, SEE STRUCTURAL DRAWINGS
2. SEE SPECIFICATION SECTION 04200 BUILDING MASONRY FOR HORIZONTAL JOINT REINFORCING

12" 6" 0 1' 2' 3'
3/4"=1'-0"

LOWER BIRD CREEK WWTP EXPANSION
TMUA PROJECT NO. ES 2006-01
CONTRACT 1B

OPERATIONS BUILDING
ARCHITECTURAL
TORNADO SHELTER

CITY OF TULSA, OKLAHOMA
TULSA METROPOLITAN UTILITY AUTHORITY
ENGINEERING SERVICES DEPARTMENT

PLANS AND ESTIMATES PREPARED BY:

BLACK & VEATCH Building a world of difference. Black & Veatch Corporation Kansas City, Missouri
Holloway, Updike and Bollen Consulting Engineers Muskogee · Broken Arrow
ONGATES Engineering Services

STATE OF OKLAHOMA LICENSED ARCHITECT ACHIE E. BROWN A5784 09/23/2011

REVISION	BY	DATE

PLAN SCALE:	DRAWN	MDE	APPROVED:
	DESIGNED	PDR	
	SURVEY		
PROFILE SCALE:	FIELD MGR.	TOS 10/11	
HORIZONTAL: 1" =	SECT. MGR.		
	PROJ. MGR.	BBV 10/13/11	
VERTICAL 1" =	RECOMMENDED: HAS 10/13/11		DIRECTOR
FILE: AA-10	DRAWING: AA-10		DATE 10/28/2011
ATLAS PAGE NO:			SHEET 176 OF 261 SHEETS

JDS 9-28-11

B&V PROJECT NO. 145120

PLOTTED DATE: EDM17043, 6/16/2011 8:47:13 AM
SAVED DATE: EDM17043, 9/20/2011 2:15:19 PM
CYGNET ID: 145120-3000-A-B000DWBM

FD145120
D145120BV

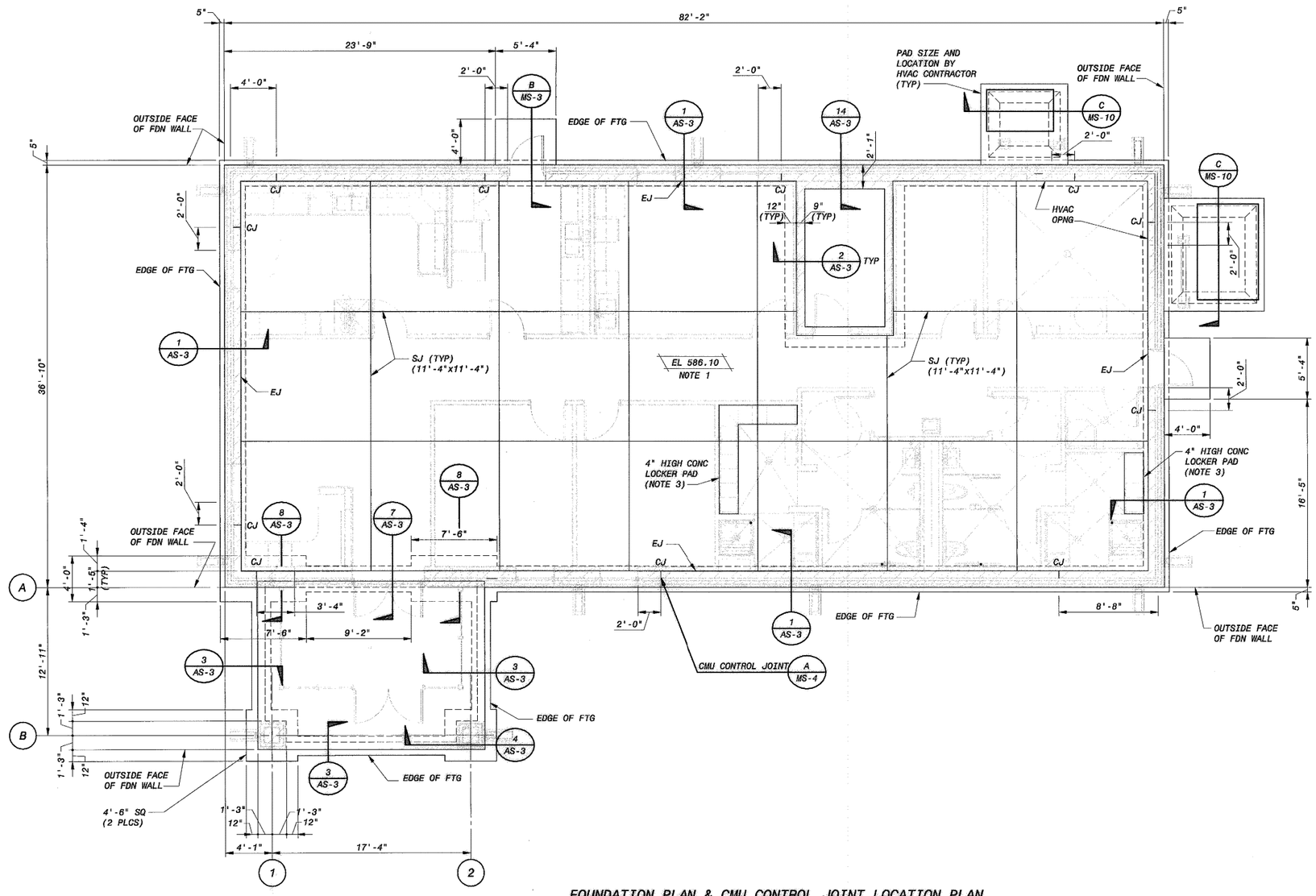

FOUNDATION PLAN & CMU CONTROL JOINT LOCATION PLAN

3/16" = 1'-0"

NOTES:

1. SEE PLUMBING DRAWING AP-1 FOR FLOOR DRAINS, PIPE STUB-UPS AND LOW POINT ELEVATIONS. SEE SLAB NOTES ON MS-8.
2. SEE STD MASONRY DETAIL SHT MS-4 AND MS-5 FOR CMU WALL REINFORCEMENT DETAILS AND SIZES.
3. SEE ARCH DWGS FOR DETAILS. ADJUST DIMENSIONS BASED ON LOCKERS FURNISHED. PAD IS UNREINFORCED CONCRETE. PROVIDE TOOLED JOINTS AT 2'-6" OC.

LOWER BIRD CREEK WWTP EXPANSION
TMUA PROJECT NO. ES 2006-01
CONTRACT 1B

OPERATIONS BUILDING
STRUCTURAL
FOUNDATION PLAN

CITY OF TULSA, OKLAHOMA
TULSA METROPOLITAN UTILITY AUTHORITY
ENGINEERING SERVICES DEPARTMENT

PLANS AND ESTIMATES PREPARED BY:

BLACK & VEATCH Building a world of difference. Black & Veatch Corporation Kansas City, Missouri

Holloway, Updike and Bellen Consulting Engineers Muskogee - Broken Arrow

DWGATES Engineering Services

REGISTERED PROFESSIONAL ENGINEER DENNIS LYNN WOOD 13651 OKLAHOMA 9/23/11

REVISION	BY	DATE

PLAN SCALE:	DRAWN	JGC	APPROVED:
	DESIGNED	DLW	
	SURVEY		
PROFILE SCALE:	FIELD MGR.	TDS 10/11	
HORIZONTAL: 1" =	SECT. MGR.		
	PROJ. MGR.	RBW 10/3/11	
VERTICAL 1" =	RECOMMENDED: HAS 10/30/11		DIRECTOR
FILE:	DRAWING: AS-1		DATE 10/28/2011
ATLAS PAGE NO:			SHEET 177 OF 261 SHEETS

B&V PROJECT NO. 145120

9-28-11

PLOTTED DATE: DAL53298, 6/10/2011 11:21:33 AM
SAVED DATE: MCK02672, 9/21/2011 9:59:29 AM
CYGNET ID: 145120-3000-S-B00005M4T

FD145120
D145120BV

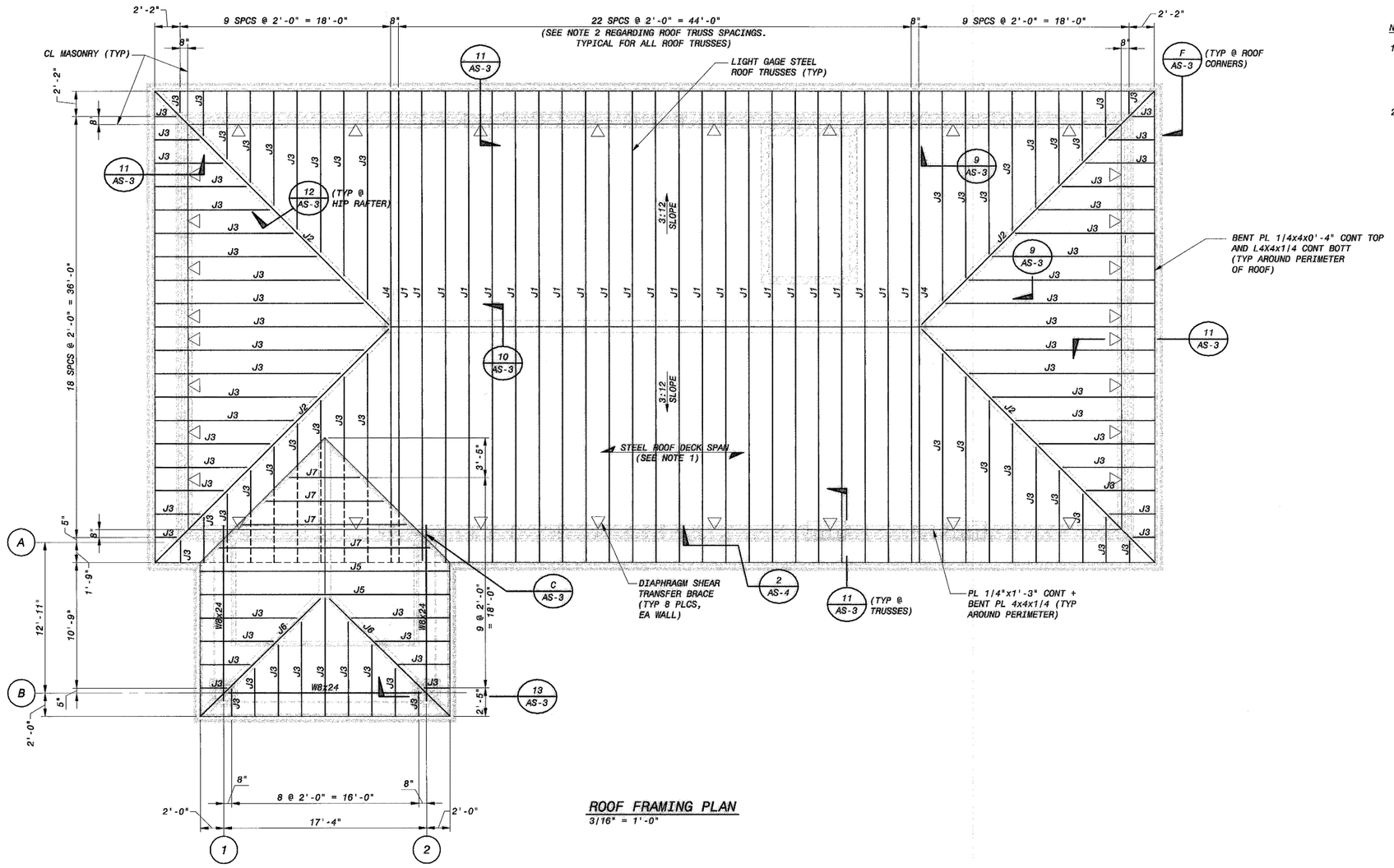

ROOF FRAMING PLAN

3/16" = 1'-0"

NOTES:

1. STEEL ROOF DECK SHALL BE 1 1/2" DEEP, TYPE "B", 20 GAGE MATERIAL. DECK FASTENERS TO SUPPORT STEEL SHALL BE #12 TEK SCREWS W/ 36/5 FASTENING PATTERN. DECK SIDELAP FASTENERS SHALL BE #10 TEK SCREWS @ 12" OC.
2. TRUSS SPACINGS MAY BE INCREASED IF LIGHT GAGE STEEL TRUSS VENDOR IS ABLE TO PROVIDE A MORE ECONOMICAL SOLUTION USING A LARGER TRUSS SPACING. TRUSS SPACING SHALL BE LIMITED TO A MAXIMUM OF 4'-0". CHANGES IN DECK GAGE OR NUMBER/SIZE OF FASTENERS REQ'D DUE TO INCREASED SPACING SHALL BE AT NO COST TO OWNER.

REGISTERED PROFESSIONAL ENGINEER DENNIS LYNN WOOD 13651 OKLAHOMA 7/22/11

REVISION	BY	DATE

LOWER BIRD CREEK WWTP EXPANSION
TMUA PROJECT NO. ES 2006-01
CONTRACT 1B

OPERATIONS BUILDING
STRUCTURAL
ROOF FRAMING PLAN

CITY OF TULSA, OKLAHOMA
TULSA METROPOLITAN UTILITY AUTHORITY
ENGINEERING SERVICES DEPARTMENT

PLANS AND ESTIMATES PREPARED BY:

BLACK & VEATCH Building a world of difference. Black & Veatch Corporation Kansas City, Missouri

Holloway, Updike and Bellen Consulting Engineers Muskogee • Broken Arrow

DWGATES Engineering Services

PLAN SCALE:	DRAWN	JGC		APPROVED:
	DESIGNED	DLW		
	SURVEY			
PROFILE SCALE:	FIELD MGR.	TCB	10/11	
HORIZONTAL: 1" =	SECT. MGR.			
	PROJ. MGR.	BSN	10/5/11	
VERTICAL 1" =	RECOMMENDED:	HAS 10/3/11		DIRECTOR
FILE:	DRAWING: AS-2			DATE 10/28/2011
ATLAS PAGE NO:				SHEET 178 OF 261 SHEETS

JBS 9-28-11

B&V PROJECT NO. 145120

PLOTTED DATE: COL00272, 6/17/2011 10:55:13 AM
SAVED DATE: MCK03872, 9/21/2011 9:56:36 AM
CYGNET ID: 145120-3000-S-B00005M4V

FD145120
D145120BV

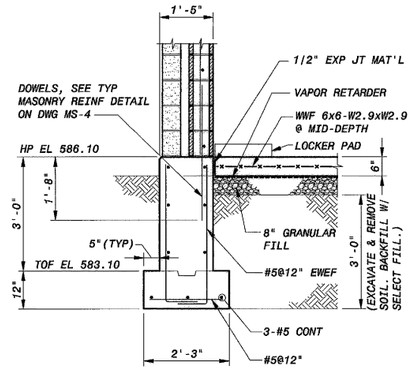

SECTION 1 / AS-1
1/2" = 1'-0"

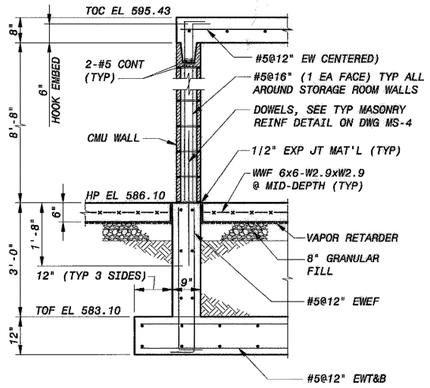

SECTION 2 / AS-1
1/2" = 1'-0"

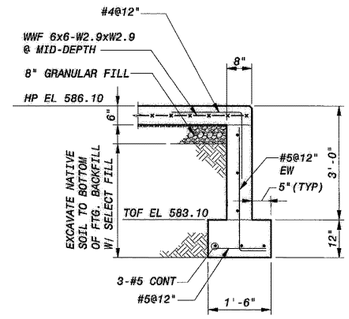

SECTION 3 / AS-1
1/2" = 1'-0"

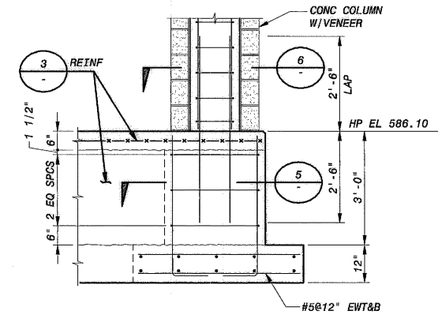

SECTION 4 / AS-1
1/2" = 1'-0"

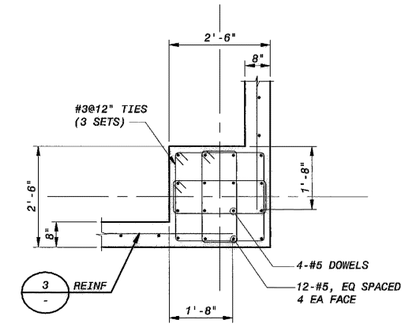

SECTION 5 / -
1/2" = 1'-0"

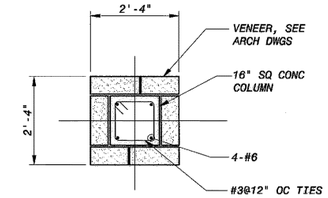

SECTION 6 / -
1/2" = 1'-0"

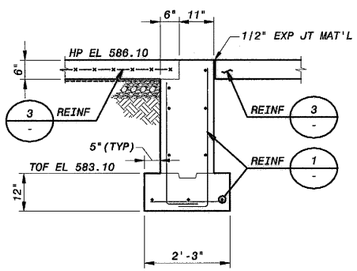

SECTION 7 / AS-1
1/2" = 1'-0"

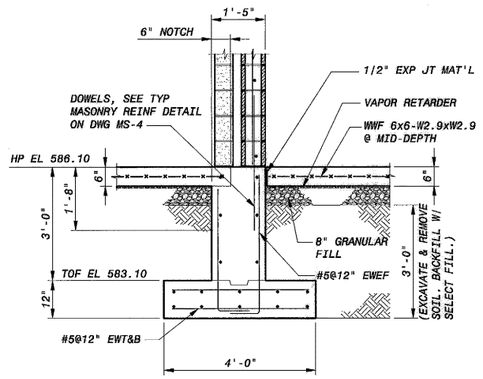

SECTION 8 / AS-1
1/2" = 1'-0"

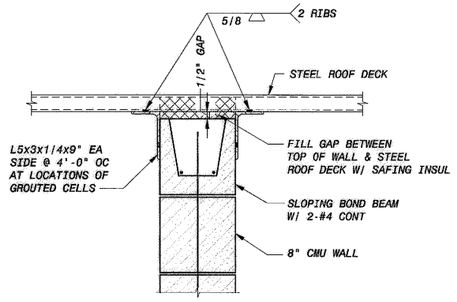

SECTION 9 / AS-2
1 1/2" = 1'-0"

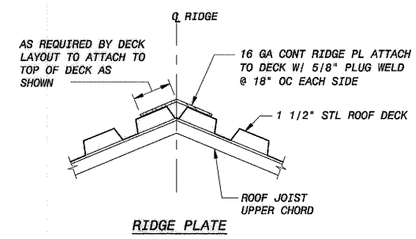

RIDGE PLATE

SECTION 10 / AS-2
1 1/2" = 1'-0"

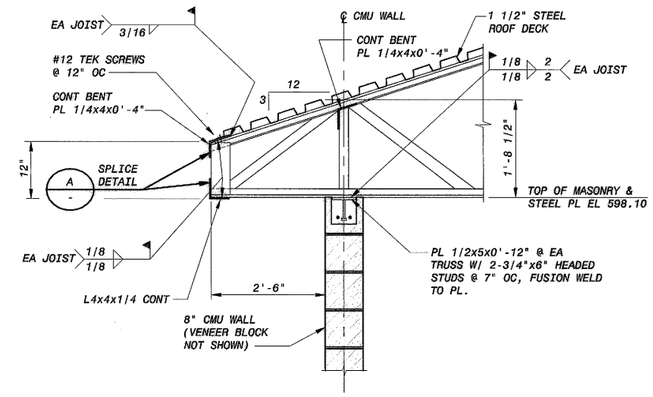

SECTION 11 / AS-2
3/4" = 1'-0"

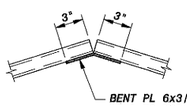

SECTION 12 / AS-2
1 1/2" = 1'-0"

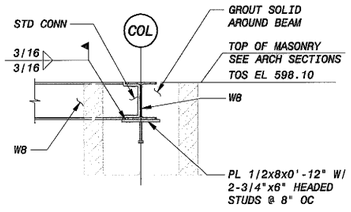

SECTION 13 / AS-2
3/4" = 1'-0"

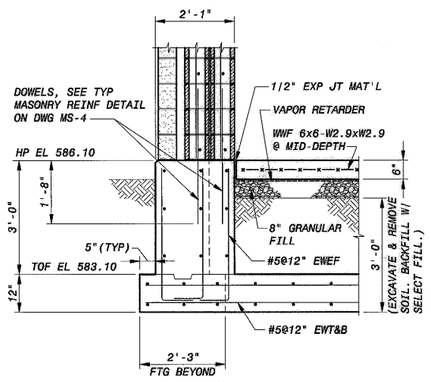

SECTION 14 / AS-1
1/2" = 1'-0"

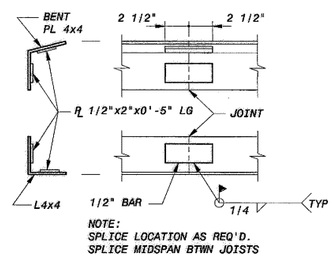

SPLICE DETAIL / A
1 1/2" = 1'-0"

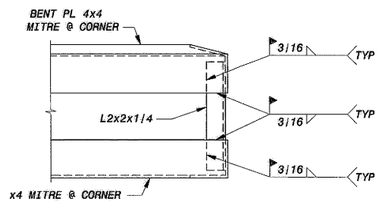

DETAIL / B
1 1/2" = 1'-0"

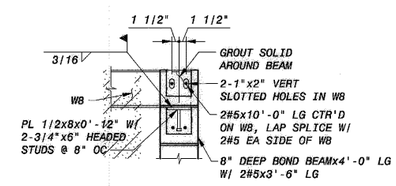

DETAIL / C
3/4" = 1'-0"

REGISTERED PROFESSIONAL ENGINEER
DENNIS LYNN WOOD
13651
OKLAHOMA
9/23/11

REVISION	BY	DATE

LOWER BIRD CREEK WWTP EXPANSION
TMUA PROJECT NO. ES 2006-01
CONTRACT 1B

OPERATIONS BUILDING
STRUCTURAL
SECTIONS AND DETAILS

CITY OF TULSA, OKLAHOMA
TULSA METROPOLITAN UTILITY AUTHORITY
ENGINEERING SERVICES DEPARTMENT

PLANS AND ESTIMATES PREPARED BY:

BLACK & VEATCH Building a world of difference. — Black & Veatch Corporation, Kansas City, Missouri
Holloway, Updike and Rollins Consulting Engineers, Muskogee · Broken Arrow
DWGATES Engineering Services

PLAN SCALE:	DRAWN	NMC		APPROVED:
	DESIGNED	DLW		
	SURVEY			
PROFILE SCALE:	FIELD MGR.	TDS	10/11	
HORIZONTAL: 1" =	SECT. MGR.			
	PROJ. MGR.	TBW	10/7/11	
VERTICAL 1" =	RECOMMENDED:	HBS 10/20/11		DIRECTOR
FILE:	DRAWING: AS-3			DATE 10/28/2011
ATLAS PAGE NO:				SHEET 179 OF 261 SHEETS

JBB 9-28-11
B&V PROJECT NO. 145120

PLOTTED DATE: COL00272, 6/17/2011 12:31:45 PM
SAVED DATE: MCKO2672, 9/21/2011 9:58:00 AM
CYGNET ID: 145120-3000-S-B000OT2MW

FD:45120
D145120BV

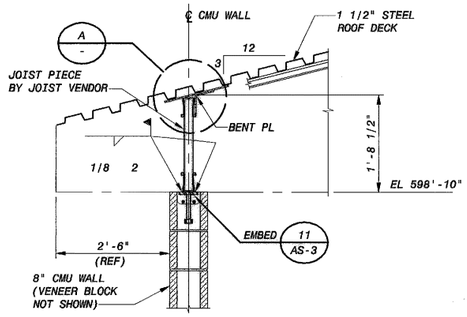

SECTION 1/AS-2
3/4" = 1'-0"

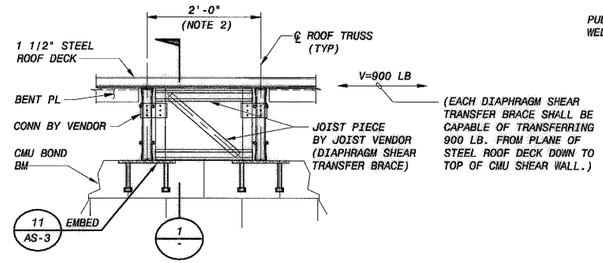

SECTION 2/AS-2
3/4" = 1'-0"

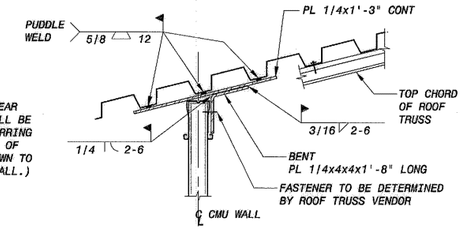

DETAIL A/-
1 1/2" = 1'-0"

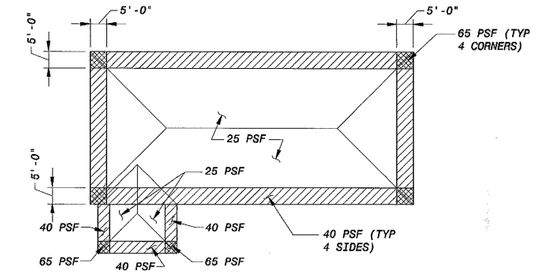

WIND UPLIFT DESIGN PRESSURES FOR LIGHT GAGE ROOF TRUSSES

NO SCALE

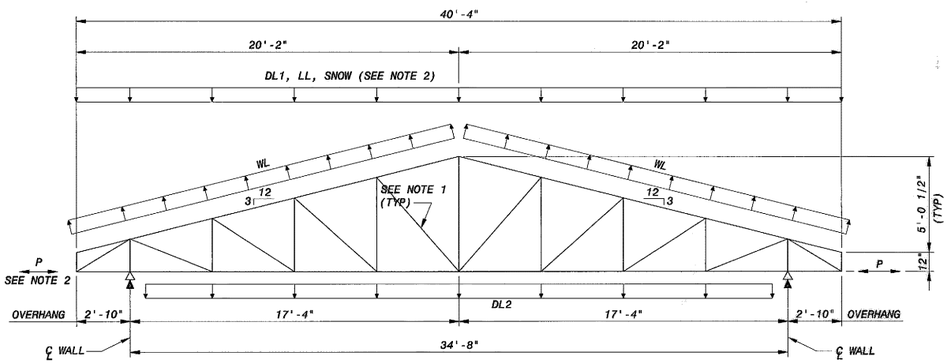

ROOF TRUSS J1

NO SCALE

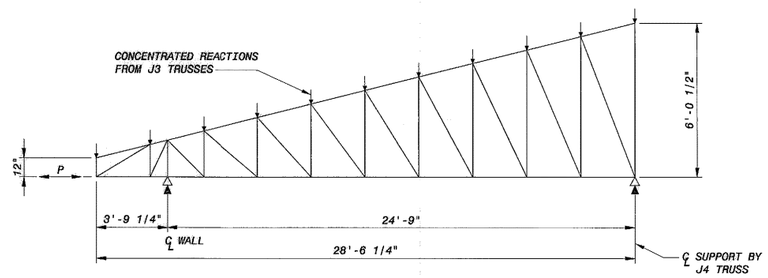

JOIST J2

NO SCALE

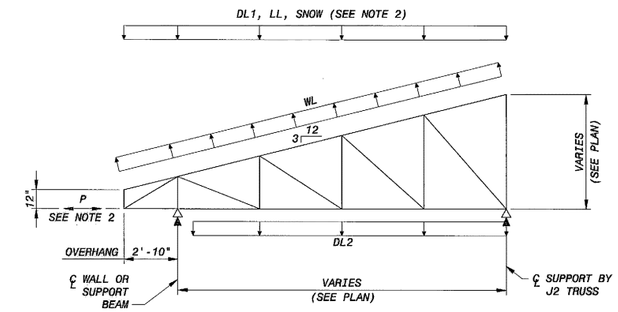

ROOF TRUSS J3

NO SCALE

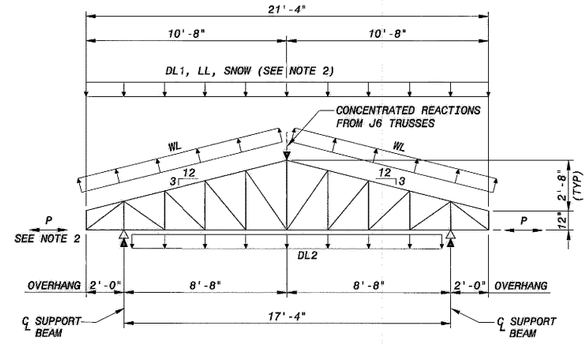

ROOF TRUSS J5

NO SCALE

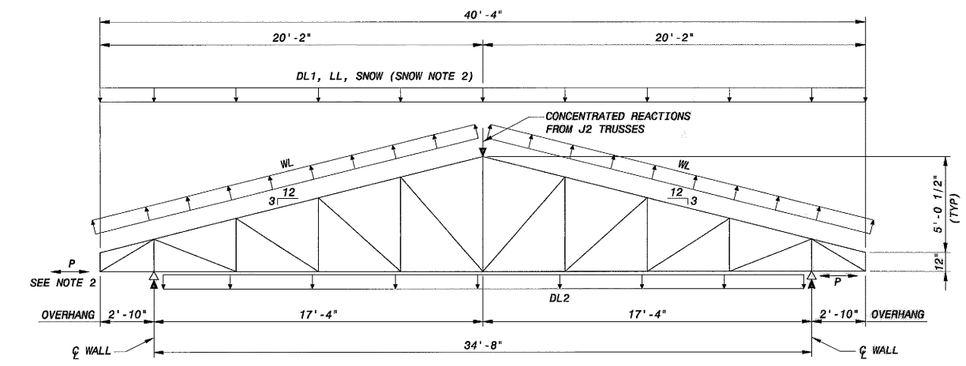

ROOF TRUSS J4

NO SCALE

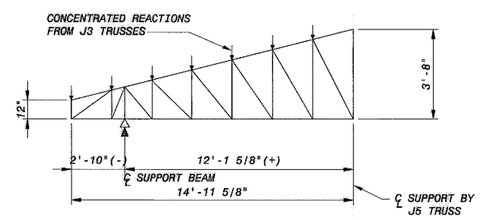

JOIST J6

NO SCALE

NOTES:

1. TRUSS WEB MEMBER ARRANGEMENT IS REPRESENTATIVE ONLY, ACTUAL ARRANGEMENT SHALL BE DETERMINED BY TRUSS VENDOR.
2. LIGHT GAGE STEEL TRUSS LOADING INFORMATION AS FOLLOWS:
   DL1 = 15 PSF (DEAD LOAD APPLIED TO TOP CHORD OF TRUSS DUE TO METAL DECK, INSULATION, PLYWOOD, ETC.)
   DL2 = 7 PSF (DEAD LOAD APPLIED TO BOTTOM CHORD OF TRUSS DUE TO HVAC, CEILING TILES, LIGHTING, ETC.)
   LL (ROOF LIVE LOAD) = 20 PSF (NON-REDUCIBLE)
   CONCENTRATED PHANTOM LIVE LOAD = 500 LB (SHALL BE APPLIED AT LOCATIONS THAT WILL INDUCE WORST CASE MOMENT AND WORST CASE SHEAR IN ROOF TRUSSES. SHALL BE COMBINED WITH UNIFORM ROOF LL.)
   S (SLOPED ROOF SNOW LOAD) = 10 PSF
   WL (WIND LOAD) = SEE LOADING DIAGRAM ON THIS DRAWING: WIND LOADING IS SERVICE LEVEL
   P = 500 LB (SERVICE LEVEL) (CONCENTRATED LOAD DUE TO LATERAL WIND OR SEISMIC FORCES FROM MASONRY WALLS. LOAD WILL BE APPLIED TO BOTTOM CHORD AND MUST BE TRANSFERRED THROUGH THE ROOF TRUSSES TO THE STEEL ROOF DECK DIAPHRAGM THAT IS ATTACHED TO THE TOP CHORD. LOAD "P" WILL BE APPLIED AT EACH SUPPORTING WALL LOCATION.)
3. TRUSS MANUFACTURER SHALL DESIGN AND PROVIDE THE REQUIRED BRIDGING (LATERAL BRACING) REQUIRED TO ENSURE STABILITY OF TRUSSES.
4. LOAD COMBINATIONS FOR TRUSS DESIGN SHALL BE IN ACCORDANCE WITH THE 2006 INTERNATIONAL BUILDING CODE.

REGISTERED PROFESSIONAL ENGINEER DENNIS LYNN WOOD 13651 OKLAHOMA 9/23/11

REVISION	BY	DATE

LOWER BIRD CREEK WWTP EXPANSION
TMUA PROJECT NO. ES 2006-01
CONTRACT 1B

OPERATIONS BUILDING
STRUCTURAL
SECTIONS, DETAILS & ROOF TRUSS LOADS

CITY OF TULSA, OKLAHOMA
TULSA METROPOLITAN UTILITY AUTHORITY
ENGINEERING SERVICES DEPARTMENT

PLANS AND ESTIMATES PREPARED BY:
BLACK & VEATCH Building a world of difference. Black & Veatch Corporation Kansas City, Missouri
Holloway, Updike and Bollen Consulting Engineers Muskogee - Broken Arrow
DWGATES Engineering Services

PLAN SCALE:	DRAWN	NMC	APPROVED:
	DESIGNED	DLW	
	SURVEY		
PROFILE SCALE:	FIELD MGR.	TDS 10/11	
HORIZONTAL: 1" =	SECT. MGR.		
	PROJ. MGR.	RBV 10/3/11	
VERTICAL 1" =	RECOMMENDED: HAS 10/30/11		DIRECTOR
FILE:	DRAWING: AS-4		DATE 10/28/2011
ATLAS PAGE NO:			SHEET 180 OF 261 SHEETS

JBB 9-28-11 B&V PROJECT NO. 145120

PLOTTED DATE: CUS12316, 2/11/2010 10:44:51 AM
SAVED DATE: MCK02672, 9/21/2011 8:42:45 AM
C*GNET ID: 145120-3000-S-B00001341

FD145120
D145120BV

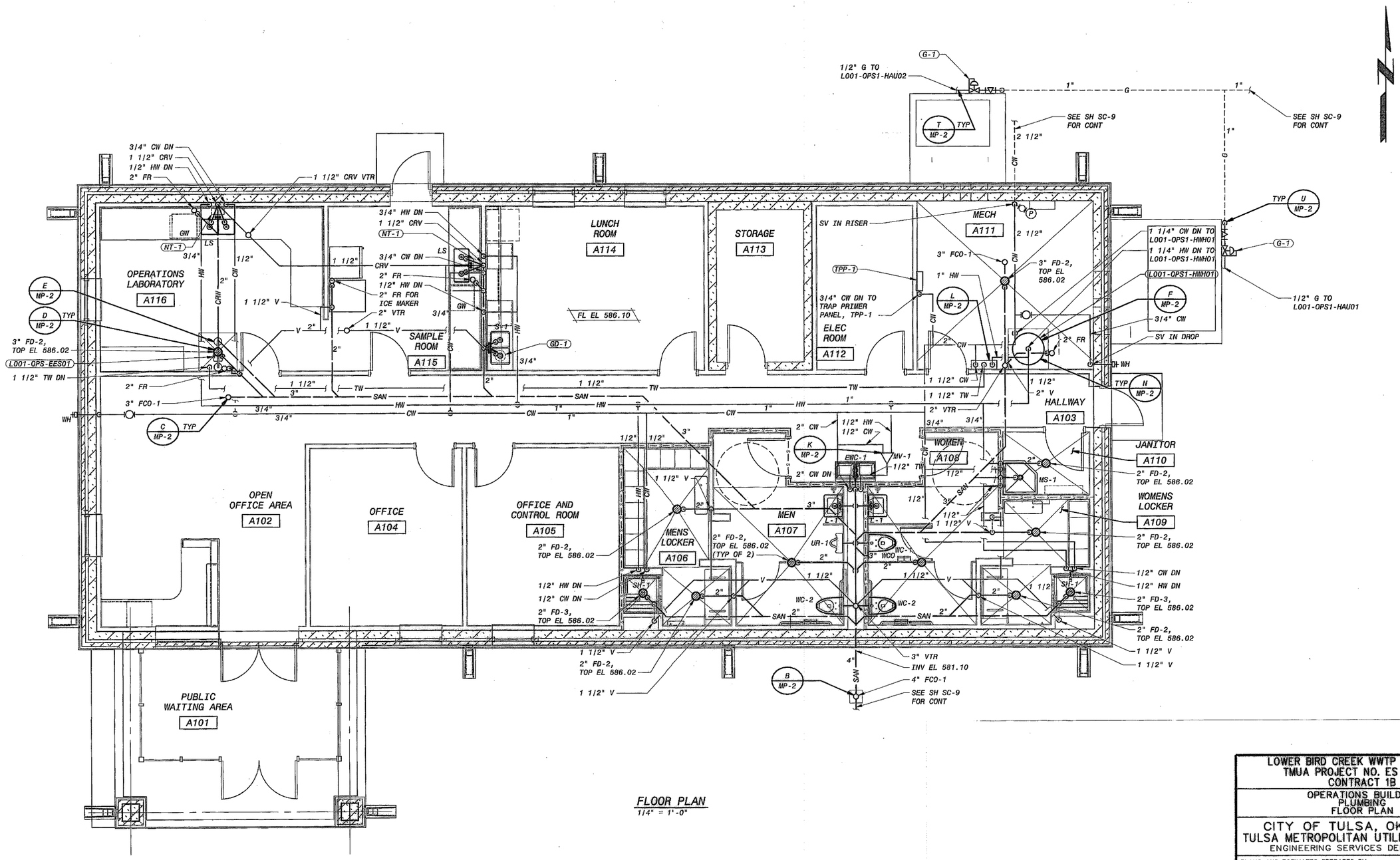

FLOOR PLAN
1/4" = 1'-0"

LOWER BIRD CREEK WWTP EXPANSION
TMUA PROJECT NO. ES 2006-01
CONTRACT 1B

OPERATIONS BUILDING
PLUMBING
FLOOR PLAN

CITY OF TULSA, OKLAHOMA
TULSA METROPOLITAN UTILITY AUTHORITY
ENGINEERING SERVICES DEPARTMENT

PLANS AND ESTIMATES PREPARED BY:

BLACK & VEATCH Building a world of difference. Black & Veatch Corporation Kansas City, Missouri

Holloway, Updike and Belton Consulting Engineers Muskogee · Broken Arrow

REGISTERED PROFESSIONAL ENGINEER DAVID WILLIAM NELSON 17889 OKLAHOMA

REVISION	BY	DATE

PLAN SCALE: 1/4" = 1'-0"	DRAWN	BDL	
	DESIGNED	TRD	
	SURVEY		
PROFILE SCALE:	FIELD MGR.	TDS	10/11
HORIZONTAL: 1" =	SECT. MGR.		
	PROJ. MGR.	RBV	10/3/11
VERTICAL 1" =	RECOMMENDED: HAB 10/30/11		

APPROVED: DIRECTOR

FILE: AP-01.DWG DRAWING: AP-1 DATE 10/28/2011

ATLAS PAGE NO: SHEET 181 OF 261 SHEETS

HAB 9-28-11 B&V PROJECT NO. 145120

PLOTTED DATE: 9/22/2011 5:40:25 AM, Batch Plot
SAVED DATE: LOV16744, 9/20/2011 10:20:15 AM
CYGNET ID: 145120-3000-PB-B0000TOU7

FD145120
D145120BV

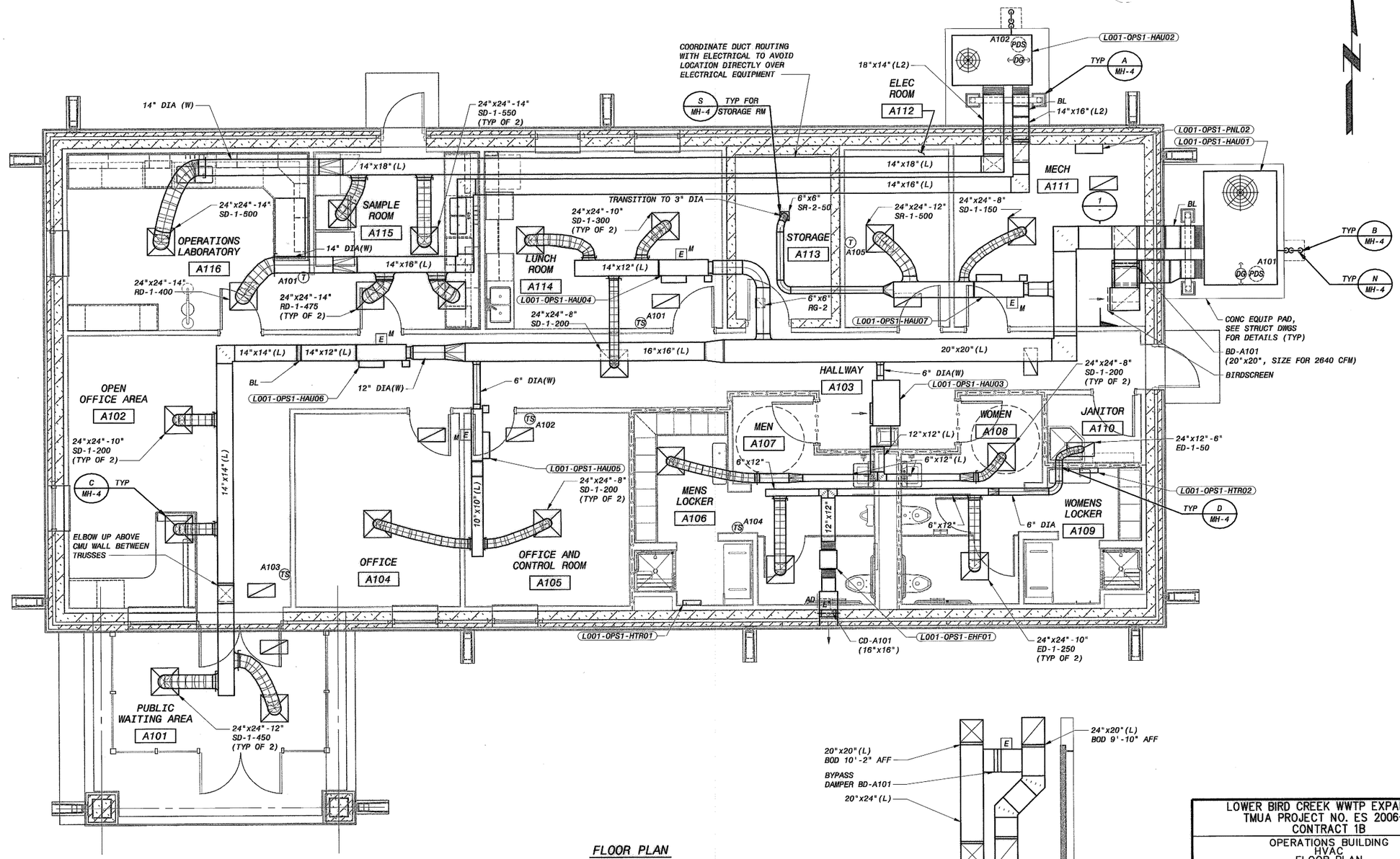

FLOOR PLAN
1/4" = 1'-0"

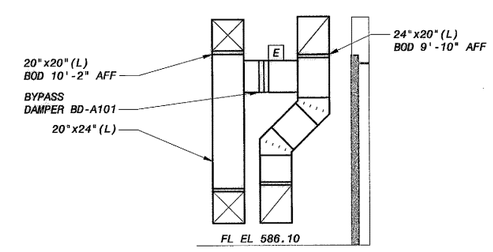

SECTION 1 -
1/4" = 1'-0"

LOWER BIRD CREEK WWTP EXPANSION
TMUA PROJECT NO. ES 2006-01
CONTRACT 1B

OPERATIONS BUILDING
HVAC
FLOOR PLAN

CITY OF TULSA, OKLAHOMA
TULSA METROPOLITAN UTILITY AUTHORITY
ENGINEERING SERVICES DEPARTMENT

PLANS AND ESTIMATES PREPARED BY:

BLACK & VEATCH Building a world of difference.
Black & Veatch Corporation Kansas City, Missouri
Holloway, Updike and Bellon Consulting Engineers Muskogee · Broken Arrow
D.W. GATES Engineering Services

REGISTERED PROFESSIONAL ENGINEER DAVID WILLIAM NELSON 17860 OKLAHOMA

REVISION	BY	DATE

PLAN SCALE: 1/4" = 1'-0"	DRAWN	BDL	APPROVED:
	DESIGNED	MM,TD	
	SURVEY		
PROFILE SCALE:	FIELD MGR.	TCB 10/h	
HORIZONTAL: 1" =	SECT. MGR.		
	PROJ. MGR.	RBV 10/3/11	
VERTICAL 1" =	RECOMMENDED: HAB 10/20/11		DIRECTOR
FILE: AH-01.DWG	DRAWING: AH-1		DATE 10/28/2011
ATLAS PAGE NO:			SHEET 182 OF 261 SHEETS

9-28-11 B&V PROJECT NO. 145120

PLOTTED DATE: 9/22/2011 5:39:11 AM, Batch Plot
SAVED DATE: LOV16744, 9/20/2011 10:42:47 AM
CYGNET ID: 145120-3000-H-B0000T00N

FD145120
D145120BV

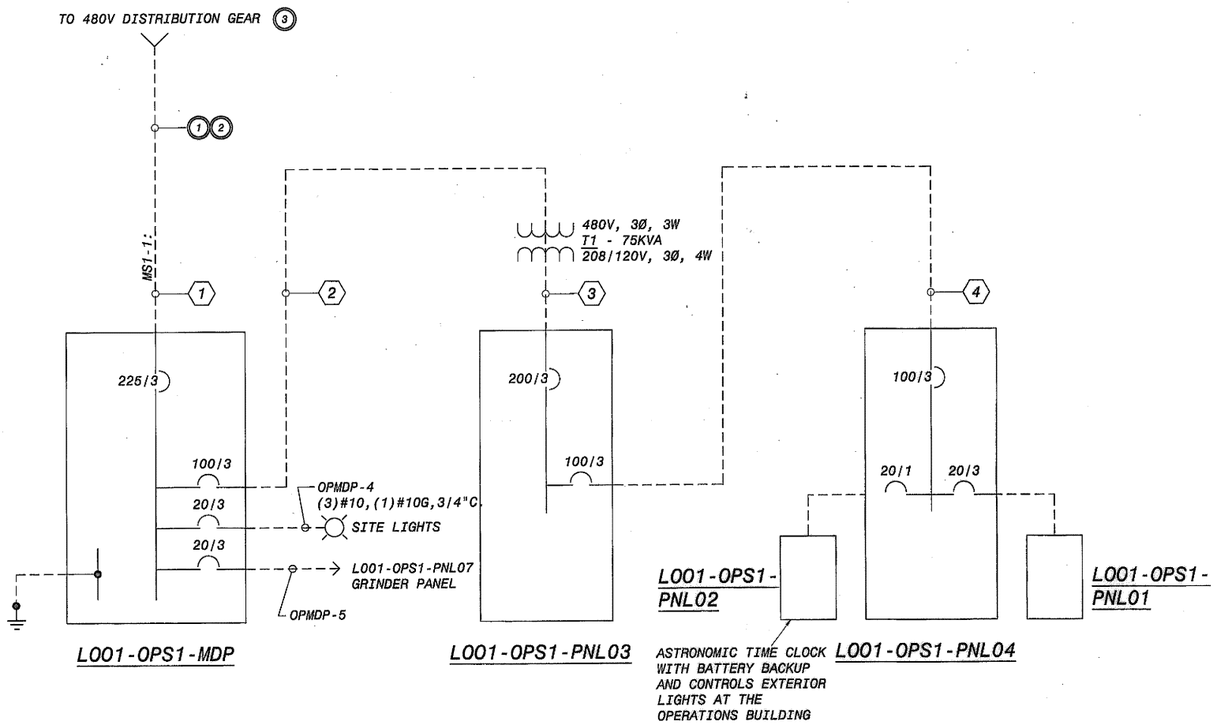

ELECTRICAL - RISER DIAGRAMS
SCALE: NONE

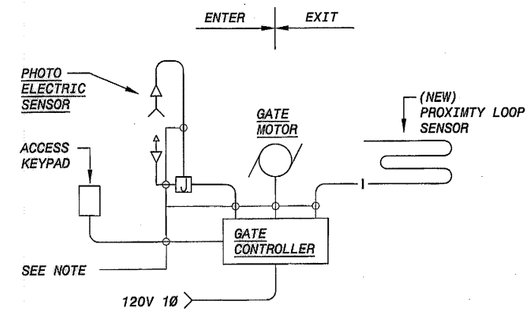

ELECTRIC OPERATED ACCESS GATE
SCALE: NONE

NOTE: CIRCUIT FOR GATE CONTROLLER TO USE DUCT BANK AND CONDUIT SHOWN ON CIVIL SITE PLAN SE-4. INSTALL 3-#12, 1-#12G AND 6-#14 CONTROL IN 2" PVC CONDUIT TO OPERATIONS BUILDING. INITIAL UNIT IS RELOCATED CITY OF TULSA GATE CONTROLLER. PROVIDE NEW POXIMITY LOOP SENSOR AND CONNECT RELOCATED GATE CONTROLLER, KEYPAD AND PHOTO ELECTRIC SENSOR AND ASSOCIATED SUPPORTS. ALL EXPOSED CONDUIT TO BE 3/4" RIGID GALVANIZED STEEL.

FEEDER SCHEDULE

No.	CONDUIT	WIRE SIZE
1	(1) - 4" (1) - 4" SPARE	(3) - #4/0 & (1) - #2G
2	(1) - 1 1/2"	(3) - #3 THWN & (1) - #8G
3	(1) - 2"	(4) - #3/0 THWN & (1) - #6G
4	(1) - 1 1/2"	(4) - #3 THWN & (1) - #8G

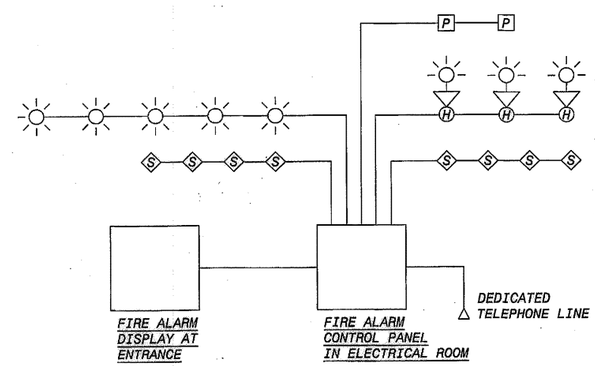

FIRE ALARM RISER DIAGRAM - SEE SPECIFICATIONS FOR REQUIREMENTS
SCALE: NONE

NOTE:
FIRE ALARM RISER DIAGRAM IS PROVIDED FOR REFERENCE. SEE SPECIFICATIONS FOR ADDITIONAL INFORMATION. IF THERE IS A CONFLICT BETWEEN THE SPECIFICATIONS AND THE DIAGRAM, THE SPECIFICATIONS SHALL APPLY.

NOTES:

1. RUN (1) ADDITIONAL 4" CONDUIT FOR POWER SPARE. SEE SITE PLAN FOR ROUTING.
2. RUN (2) - 2" CONDUITS FOR CONTROL. STUB UP CONDUITS IN ELECTRICAL ROOM.
3. REFER TO SITE POWER PLAN FOR LOCATION OF EXISTING OUTDOOR 480V MAIN GEAR AND DUCT BANK SYSTEM.
4. GROUND SYSTEM PER ELECTRICAL CODE REQUIREMENTS WITH A 3/4" x 10' COPPER-CLAD STEEL ROD. CONNECT TO GROUND BUS IN MDP WITH A GREEN INSULATED 4/0 COPPER WIRE.

LOWER BIRD CREEK WWTP EXPANSION
TMUA PROJECT NO. ES 2006-01
CONTRACT 1B

OPERATIONS BUILDING
ELECTRICAL
RISER DIAGRAMS

CITY OF TULSA, OKLAHOMA
TULSA METROPOLITAN UTILITY AUTHORITY
ENGINEERING SERVICES DEPARTMENT

PLANS AND ESTIMATES PREPARED BY:
BLACK & VEATCH Building a world of difference. Black & Veatch Corporation Kansas City, Missouri
Holloway, Updike and Bellan Consulting Engineers Muskogee · Broken Arrow
DWGATES Engineering Services

STATE OF OKLAHOMA REGISTERED PROFESSIONAL ENGINEER DEREK WAYNE GATES
9-23-11

REVISION	BY	DATE

PLAN SCALE:	DRAWN	FLT		APPROVED:
	DESIGNED	AC		
	SURVEY			
PROFILE SCALE:	FIELD MGR.	708	10/4	
HORIZONTAL: 1" =	SECT. MGR.			
	PROJ. MGR.	BSV	10/3/11	
VERTICAL 1" =	RECOMMENDED: HAS 10/24/11			DIRECTOR
FILE: AE01	DRAWING: AE-1			DATE 10/28/2011
ATLAS PAGE NO:				SHEET 183 OF 261 SHEETS

JBB 9-28-11 B&V PROJECT NO. 145120

PLOTTED DATE:
SAVED DATE: FRE08341, 9/21/2011 5:13:57 PM
CYGNET ID: 145120-3000-C-B000QR726
FD145120
D145120DWG

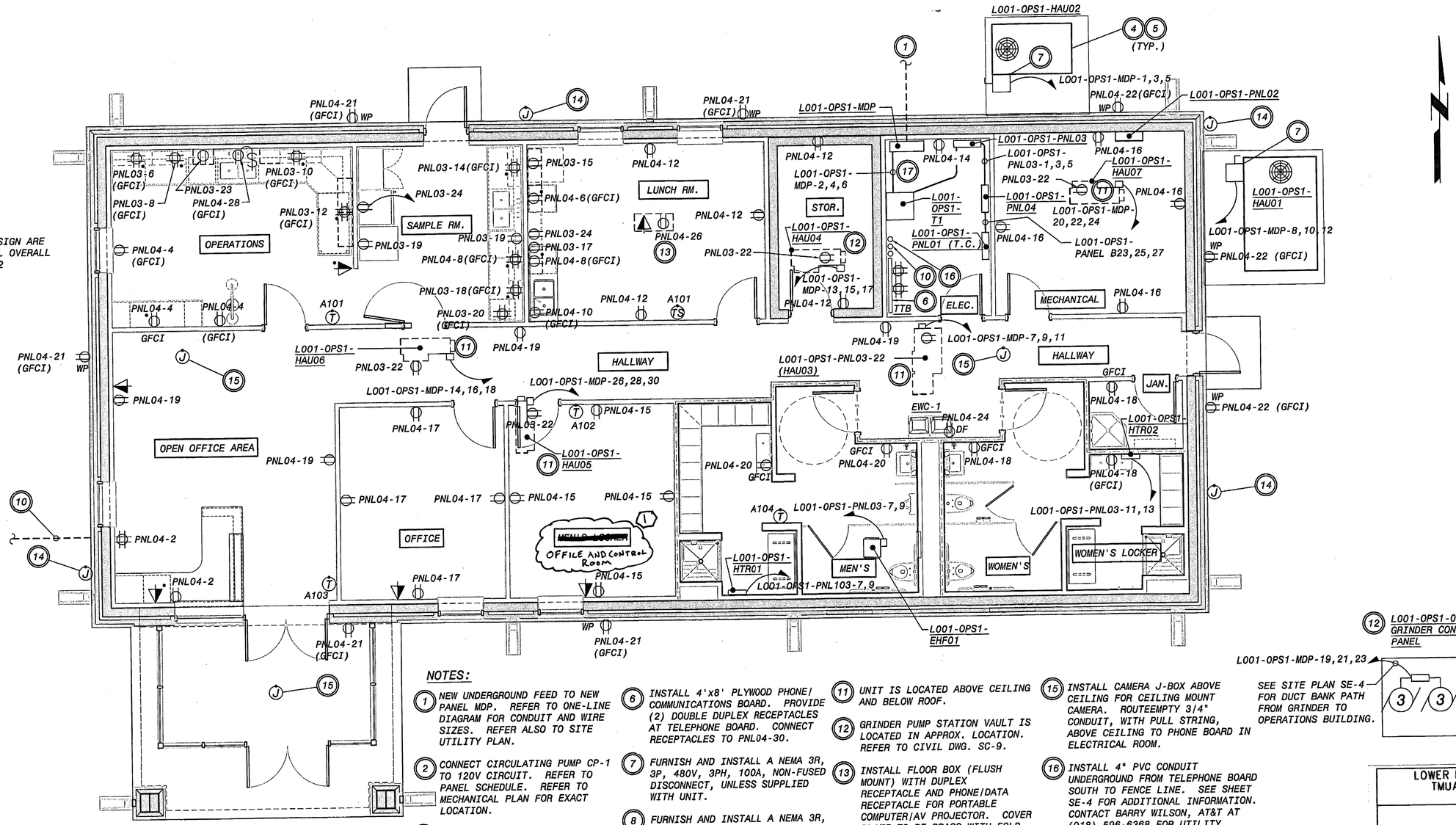

NOTES:

1. NEW UNDERGROUND FEED TO NEW PANEL MDP. REFER TO ONE-LINE DIAGRAM FOR CONDUIT AND WIRE SIZES. REFER ALSO TO SITE UTILITY PLAN.
2. CONNECT CIRCULATING PUMP CP-1 TO 120V CIRCUIT. REFER TO PANEL SCHEDULE. REFER TO MECHANICAL PLAN FOR EXACT LOCATION.
3. CONNECT FIRE ALARM SYSTEM TO TAMPER SWITCH AND FLOW VALVE ON SPRINKLER SYSTEM RISER. REFER TO MECHANICAL, PLUMBING AND FIRE ALARM DRAWINGS.
4. REFER TO MECHANICAL PLAN FOR EXACT LOCATION OF EQUIPMENT.
5. REFER TO PANEL SCHEDULES FOR CIRCUIT DESIGNATIONS ON EQUIPMENT.
6. INSTALL 4'x8' PLYWOOD PHONE/COMMUNICATIONS BOARD. PROVIDE (2) DOUBLE DUPLEX RECEPTACLES AT TELEPHONE BOARD. CONNECT RECEPTACLES TO PNL04-30.
7. FURNISH AND INSTALL A NEMA 3R, 3P, 480V, 3PH, 100A, NON-FUSED DISCONNECT, UNLESS SUPPLIED WITH UNIT.
8. FURNISH AND INSTALL A NEMA 3R, 3P, 480V, 3PH, 30A, NON-FUSED DISCONNECT FOR PHP-A102.
9. FURNISH AND INSTALL ALL NECESSARY CONDUIT AND WIRE FOR HVAC CONTROLS. COORDINATE WITH HVAC CONTRACTOR.
10. OUTGOING CIRCUIT TO UTILIZE DUCT BANK SHOWN ON CIVIL SITE PLAN SE-4. SEE DETAIL, SHEET AE-1 FOR KEYPAD/GATE OPERATOR INFORMATION.
11. UNIT IS LOCATED ABOVE CEILING AND BELOW ROOF.
12. GRINDER PUMP STATION VAULT IS LOCATED IN APPROX. LOCATION. REFER TO CIVIL DWG. SC-9.
13. INSTALL FLOOR BOX (FLUSH MOUNT) WITH DUPLEX RECEPTACLE AND PHONE/DATA RECEPTACLE FOR PORTABLE COMPUTER/AV PROJECTOR. COVER PLATE TO BE BRASS WITH FOLD DOWN RECEPTACLE COVERS.
14. INSTALL EXTERIOR CAMERA JUNCTION BOX 9' ABOVE GRADE. ROUTE EMPTY 3/4" CONDUIT, WITH PULL STRING, ABOVE CEILING TO PHONE BOARD IN ELECTRICAL ROOM.
15. INSTALL CAMERA J-BOX ABOVE CEILING FOR CEILING MOUNT CAMERA. ROUTEEMPTY 3/4" CONDUIT, WITH PULL STRING, ABOVE CEILING TO PHONE BOARD IN ELECTRICAL ROOM.
16. INSTALL 4" PVC CONDUIT UNDERGROUND FROM TELEPHONE BOARD SOUTH TO FENCE LINE. SEE SHEET SE-4 FOR ADDITIONAL INFORMATION. CONTACT BARRY WILSON, AT&T AT (918) 596-6368 FOR UTILITY COORDINATION. COORDINATE WITH CIVIL SITE PLAN SE-4. CONTACT BARRY WILSON OF AT&T (918) 596-6368 FOR UTILITY COORDINATION.
17. MINIMUM CLEAR DISTANCE BETWEEN MDP AND ANY EQUIPMENT IN FRONT OF PANEL IS 42"

ELECTRICAL - POWER PLAN

SCALE: 1/4"=1'-0"

(12) L001-OPS1-07 GRINDER CONTROL PANEL

L001-OPS1-MDP-19,21,23

SEE SITE PLAN SE-4 FOR DUCT BANK PATH FROM GRINDER TO OPERATIONS BUILDING.

ALL ELECTRICAL WORK IN GRINDER VAULT AND WITHIN 3' OF LID TO BE CLASS 1, DIV. 2 GROUP D.

LOWER BIRD CREEK WWTP EXPANSION
TMUA PROJECT NO. ES 2006-01
CONTRACT 1B

OPERATIONS BUILDING
ELECTRICAL
POWER PLAN

CITY OF TULSA, OKLAHOMA
TULSA METROPOLITAN UTILITY AUTHORITY
ENGINEERING SERVICES DEPARTMENT

PLANS AND ESTIMATES PREPARED BY:

BLACK & VEATCH Building a world of difference. Black & Veatch Corporation Kansas City, Missouri

Holloway, Updike and Bellon Consulting Engineers Muskogee · Broken Arrow

D.W. GATES Engineering Services

REVISION	BY	DATE
Addendum No. 1	PSB	11-6-12

REGISTERED PROFESSIONAL ENGINEER DEREK WAYNE GATES OKLAHOMA

9-23-11

PLAN SCALE:	DRAWN	FLT	
	DESIGNED	AC	
	SURVEY		
PROFILE SCALE:	FIELD MGR.	TOB	10/11
	SECT. MGR.		
HORIZONTAL: 1" =	PROJ. MGR.	BSV	10/31/11
VERTICAL 1" =	RECOMMENDED:	HBS 10/31/11	

APPROVED:

DIRECTOR

FILE: AE02 DRAWING: AE-2

DATE 10/28/2011

ATLAS PAGE NO:

SHEET 184 OF 261 SHEETS

B&V PROJECT NO. 145120

PLOTTED DATE:
SAVED DATE: FRI08341, 9/21/2011 5:15:38 PM
CYGNET ID: 145120-3000-C-B00008726

FD145120
D145120DWG

9-28-11

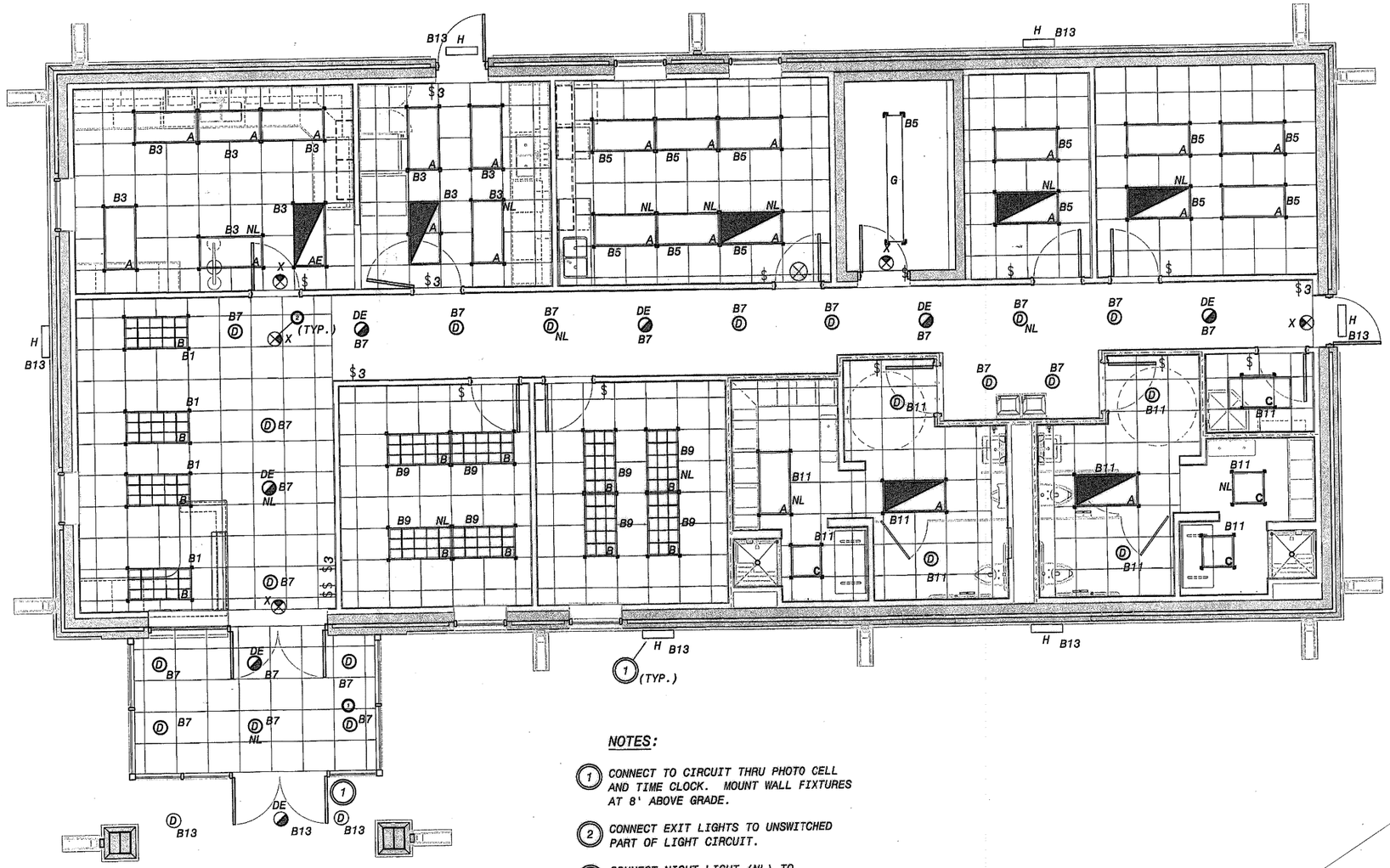

NOTES:

1. CONNECT TO CIRCUIT THRU PHOTO CELL AND TIME CLOCK. MOUNT WALL FIXTURES AT 8' ABOVE GRADE.
2. CONNECT EXIT LIGHTS TO UNSWITCHED PART OF LIGHT CIRCUIT.
3. CONNECT NIGHT LIGHT (NL) TO UNSWITCHED PORTION OF CIRCUIT.

LIGHTING PLAN

SCALE: 1/4"=1'-0"

LOWER BIRD CREEK WWTP EXPANSION
TMUA PROJECT NO. ES 2006-01
CONTRACT 1B

OPERATIONS BUILDING
ELECTRICAL
LIGHTING PLAN

CITY OF TULSA, OKLAHOMA
TULSA METROPOLITAN UTILITY AUTHORITY
ENGINEERING SERVICES DEPARTMENT

PLANS AND ESTIMATES PREPARED BY:

BLACK & VEATCH Building a world of difference. Black & Veatch Corporation Kansas City, Missouri

Holloway, Updike and Belden Consulting Engineers Muskogee · Broken Arrow

DWGATES Engineering Services

REVISION	BY	DATE

DEREK WAYNE GATES OKLAHOMA REGISTERED PROFESSIONAL ENGINEER
9-23-11

PLAN SCALE:	DRAWN	FLT	
	DESIGNED	AC	
	SURVEY		
PROFILE SCALE:	FIELD MGR.	FLT	10/11
HORIZONTAL: 1" =	SECT. MGR.		
	PROJ. MGR.	RSH	10/31/11
VERTICAL 1" =	RECOMMENDED:	HAS	10/30/11

APPROVED:

DIRECTOR

FILE: AE03 DRAWING: AE-3

ATLAS PAGE NO:

DATE JUN 2011

SHEET 185 OF 261 SHEETS

JSO 9-28-11

B&V PROJECT NO. 145120

PLOTTED DATE:
SAVED DATE: FRE08341, 9/21/2011 5:16:27 PM
CYGNET ID: 145120-3000-C-B000SR7Z6

FD145120
D145120DWG

PNL: L001-OPS1-MDP
SERVICE: 480V 3PH
ISC RATING: 42,000 A.I.C.
NO SERIES RATINGS ACCEPTED

PNL TYPE:.
BUS: 400A COPPER WITH GROUND BUS

CAB: SURFACE NEMA 1
MAIN: 225A BREAKER
FEED: BOTTOM

SERVING	WIRE SIZE	AMPS	POLES	CIRC. NO.	PHASE LOADING AMPS A		B		C		CIRC. NO.	POLES	AMPS	WIRE SIZE	SERVING
L001-OPS1-HAU02	12	20	3	1	11.7	94.8					2	3	100	3	TRANSFORMER 75KVA 1Ø L001-OPS1-PNL03
				3			11.7	104.1			4				
				5					11.7	61.3	6				
L001-OPS1-HAU03	12	20	3	7	4.6	22.7					8	3	30	10	L001-OPS1-HAU01
				9			4.6	22.7			10				
				11					4.6	22.7	12				
L001-OPS1-HAU04	12	20	3	13	3.6	6.6					14	3	20	12	L001-OPS1-HAU06
				15			3.6	6.6			16				
				17					3.6	6.6	18				
L001-OPS1-PNL07 GRINDER PANEL	12	20	3	19	10.0	3.0					20	3	20	12	L001-OPS1-HAU07
				21			10.0	3.0			22				
				23					10.0	3.0	24				
SPACE				25		2.4					26	3	20	12	L001-OPS1-HAU05
				27				2.4			28				
				29						2.4	30				
SPACE				31		4.0					32	3	20	12	SITE LIGHTING
				33				4.0			34				
				35						4.0	36				
SPACE				37							38	3	20	12	L001-OPS1-HWH01
				39							40				
				41							42				
				TOTALS:	163.4		172.7		129.9						

PNL: L001-OPS1-PNL03
SERVICE120/208V 3PH 4W
ISC RATING: 22,000 A.I.C.
NO SERIES RATINGS ACCEPTED

PNL TYPE:.
BUS: 225A COPPER WITH GROUND BUS

CAB: SURFACE NEMA 1
MAIN: 200A BREAKER
FEED: BOTTOM OR TOP

SERVING	WIRE SIZE	AMPS	POLES	CIRC. NO.	PHASE LOADING AMPS A		B		C		CIRC. NO.	POLES	AMPS	WIRE SIZE	SERVING
L001-OPS1-PNL04	3	100	3	1	34.6	40.0					2	2	50	6	OVEN (RANGE)
				3			45.0	40.0			4				
				5					39.7	10.0	6	1	20	10	FRONT GATE
L001-OPS1-HTR01	12	20	2	7	5.6	3.0					8	1	20	12	RECEPTACLES (GFCI)
				9			5.6	3.0			10	1	20	12	RECEPTACLES (GFCI)
L001-OPS1-HTR02	12	20	2	11					5.6	3.0	12	1	20	12	RECEPTACLES (GFCI)
				13	5.6	3.0					14	1	20	12	RECEPTACLES (GFCI)
REFRIGERATOR	12	20	1	15			7.0	3.0			16	1	20	12	RECEPTACLES (GFCI)
MICROWAVE	12	20	1	17					8.0	3.0	18	1	20	12	RECEPTACLES (GFCI)
ICE MACHINE	12	20	1	19	5.0	3.0					20	1	20	12	RECEPTACLES (GFCI)
REFRIGERATOR	12	20	1	21			7.0	7.5			22	1	20	12	RECEPTACLES (GFCI)
WASHER	12	20	1	23					5.0		24	1	20	12	FRONT SIGN
SPACE				25							26				SPACE
SPACE				27							28				SPACE
SPACE				29							30				SPACE
SPACE				31							32				SPACE
SPACE				33							34				SPACE
SPACE				35							36				SPACE
SPACE				37							38				SPACE
SPACE				39							40				SPACE
SPACE				41							42				SPACE
				TOTALS:	99.8		103.6		74.3						

PNL: L001-OPS1-PNL04
SERVICE208/120V 3PH 4W
ISC RATING: 22,000 A.I.C.
NO SERIES RATINGS ACCEPTED

PNL TYPE:.
BUS: 100A COPPER WITH GROUND BUS

CAB: SURFACE NEMA 1
MAIN: 100A M.L.O.
FEED: BOTTOM OR TOP

SERVING	WIRE SIZE	AMPS	POLES	CIRC. NO.	PHASE LOADING AMPS A		B		C		CIRC. NO.	POLES	AMPS	WIRE SIZE	SERVING
LIGHTS	12	20	1	1	4.0	4.5					2	1	20	12	RECEPTACLES (GFCI)
LIGHTS	12	20	1	3			8.3	6.0			4	1	20	12	RECEPTACLES (GFCI)
LIGHTS	12	20	1	5					10.0	3.0	6	1	20	12	RECEPTACLES (GFCI)
LIGHTS	12	20	1	7	6.5	3.0					8	1	20	12	RECEPTACLES (GFCI)
LIGHTS	12	20	1	9			6.7	3.0			10	1	20	12	RECEPTACLES (GFCI)
LIGHTS	12	20	1	11					5.7	3.0	12	1	20	12	RECEPTACLES (GFCI)
LIGHTS	12	20	1	13	4.6	3.0					14	1	20	12	RECEPTACLES (GFCI)
RECEPTACLES	12	20	1	15			6.0	3.0			16	1	20	12	RECEPTACLES (GFCI)
RECEPTACLES	12	20	1	17					6.0	3.0	18	1	20	12	RECEPTACLES (GFCI)
RECEPTACLES	12	20	1	19	6.0	3.0					20	1	20	12	RECEPTACLES (GFCI)
RECEPT'S OUTSIDE(GFCI)	12	20	1	21			7.5	4.5			22	1	20	12	RECEPT'S OUTSIDE(GFCI)
L001-OPS1-PANEL 01 TIME CLOCK			3	23						8.0	24	1	20	12	EWC-1 (DRINKING FOUN.)
				25							26	1	20	12	FLOOR RECEPTACLE
				27							28	1	20	12	RECEPTACLE (GFCI) DISPOSAL
L001-OPS1-EHF01	12	20	1	29					1.0	6.0	30	1	20	12	RECEPTACLES (TTB)
SPARE	12	20	1	31							32				SPACE
SPARE	12	20	1	33							34				SPACE
SPARE	12	20	1	35							36				SPACE
SPARE	12	20	1	37							38				SPACE
SPARE	12	20	1	39							40				SPACE
SPARE	12	20	1	41							42				SPACE
				TOTALS:	34.6		45.0		39.7						

LIGHTING FIXTURE LEGEND & SCHEDULE

FIXTURE NO.	MANUFACTURER & CATALOG NO.	VOLTS WATTS	LAMPS	MOUNTING	NOTES & REMARKS
A	LIGHTOLIER XP2GVA332UNV	120 96	F32T8/SP41/ECO	RECESSED	
AE	LIGHTOLIER XP2GVA332UNV-FBP50	120 96	F32T8/SP41/ECO	RECESSED	1350 LUMEN EM BALLAST
B	LIGHTOLIER PLA2G18LS332UNVH3GLR	120 96	F32T8	RECESSED	
C	LIGHTOLIER XP2GVA26U-UNVH3GLR	120 52	2T8U6	RECESSED	
D	LIGHTOLIER 1001HCD/1001F26	120 28	F26TBX/841/A/ECO	RECESSED	
DE	LIGHTOLIER 1001HCD/1001F26EM	120 28	F26TBX/841/A/ECO	RECESSED	EM BALLAST
F	LIGHTOLIER	120 64	F32T8 - (2) LAMPS	SURFACE	WIRE GUARD
G	LIGHTOLIER SWT8T232HPF-AWG3W-CSP	120 128	F32T8 - (4) LAMPS	SURFACE	WIRE GUARD
H	EXCELINE GXSW42HFLLBRW1	120 42	GXSW42HFLLBRW1	SURFACE	OUTSIDE WALL PACK
X	LIGHTOLIER LLNCRW	120 5	LED	SURFACE	

ELECTRICAL - SCHEDULES

SCALE: NONE

LOWER BIRD CREEK WWTP EXPANSION
TMUA PROJECT NO. ES 2006-01
CONTRACT 1B

OPERATIONS BUILDING
ELECTRICAL
SCHEDULES

CITY OF TULSA, OKLAHOMA
TULSA METROPOLITAN UTILITY AUTHORITY
ENGINEERING SERVICES DEPARTMENT

PLANS AND ESTIMATES PREPARED BY:

BLACK & VEATCH Building a world of difference
Black & Veatch Corporation Kansas City, Missouri
Holloway, Upchike and Bellen Consulting Engineers Muskogee · Broken Arrow
GIBGATES Engineering Services

DEREK WAYNE GATES 14802 OKLAHOMA PROFESSIONAL ENGINEER
9-23-11

REVISION	BY	DATE

PLAN SCALE:
PROFILE SCALE:
HORIZONTAL: 1" =
VERTICAL 1" =

DRAWN	FLT	
DESIGNED	AC	
SURVEY		
FIELD MGR.	TJS	10/11
SECT. MGR.		
PROJ. MGR.	RDV	10/31/11
RECOMMENDED:	HAS	10/31/11

APPROVED:
DIRECTOR

FILE: AE04 DRAWING: AE-4
DATE 10/28/2011
ATLAS PAGE NO:
SHEET 186 OF 261 SHEETS
9-28-11
B&V PROJECT NO. 145120

PLOTTED DATE:
SAVED DATE: FRE08JAN 9/21/2011 5:17:03 PM
CYGNET ID: 145120-3000-C-SK0008726
FD145120
D145120DWG

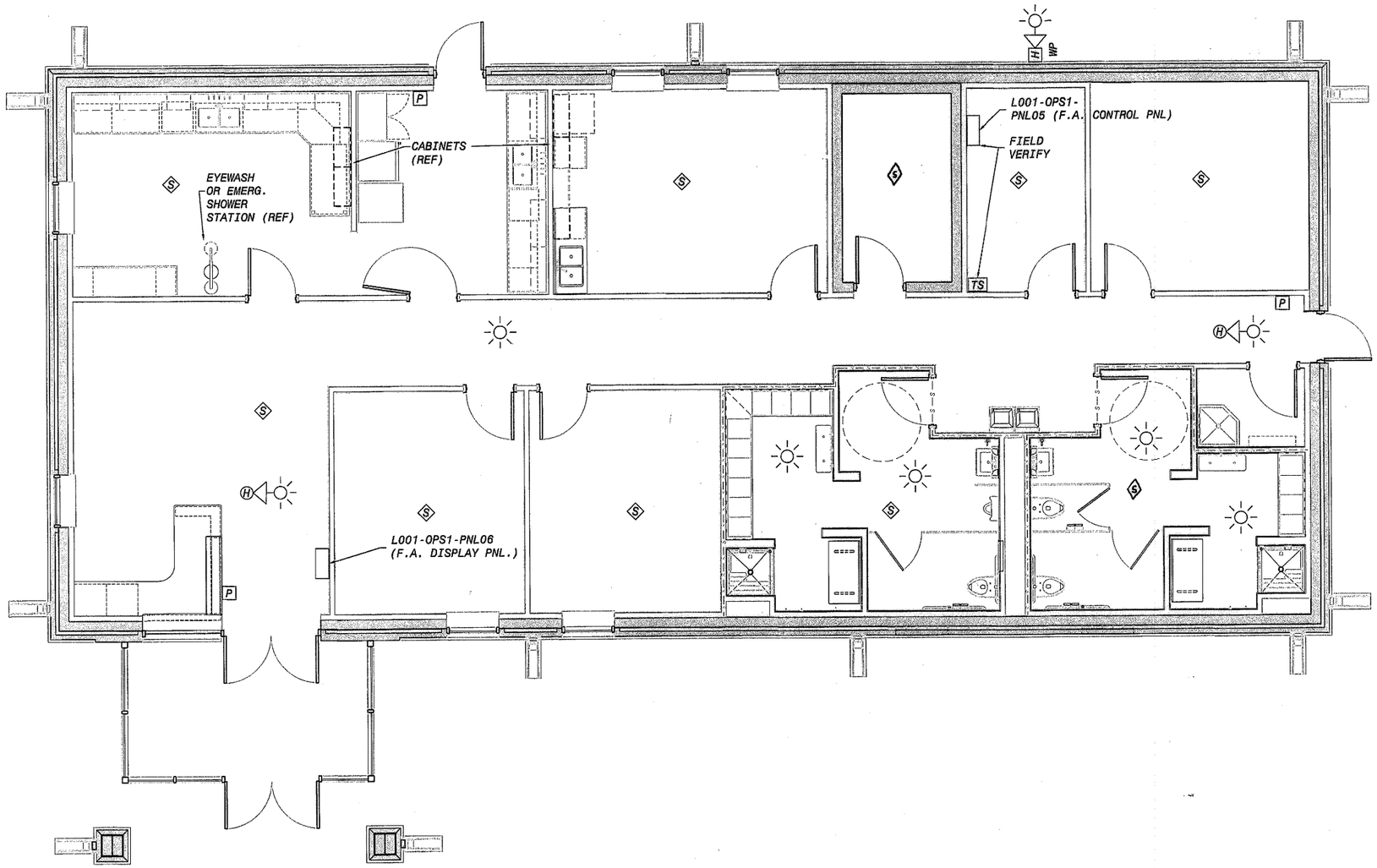

FIRE ALARM - SYMBOL LEGEND	
FS	FIRE ALARM DISPLAY
TS	TAMPER SWITCH
P	PULL STATION
	STROBE, CEILING MOUNTED
H	CEILING MOUNTED HORN-STROBE
S	SMOKE DETECTOR
H WP	CEILING MOUNTED HORN-STROBE
	FIRE ALARM CONTROL PANEL (REMOTE)

FOR REFERENCE IN CASE OF CONFLICT WITH SPECIFICATIONS, SPECIFICATIONS SHALL APPLY.

FIRE PROTECTION PLAN

SCALE: 1/4"=1'-0"

LOWER BIRD CREEK WWTP EXPANSION
TMUA PROJECT NO. ES 2006-01
CONTRACT 1B

OPERATIONS BUILDING
ELECTRICAL
FIRE PROTECTION PLAN

CITY OF TULSA, OKLAHOMA
TULSA METROPOLITAN UTILITY AUTHORITY
ENGINEERING SERVICES DEPARTMENT

PLANS AND ESTIMATES PREPARED BY:

BLACK & VEATCH Building a world of difference. Black & Veatch Corporation Kansas City, Missouri

Holloway, Updike and Dillon Consulting Engineers Muskogee · Broken Arrow

D.W. GATES Engineering Services

DEREK WAYNE GATES 9-23-11 OKLAHOMA

REVISION	BY	DATE

PLAN SCALE:	DRAWN	FLT		APPROVED:
	DESIGNED	AC		
	SURVEY			
PROFILE SCALE:	FIELD MGR.	TOB	10/11	
HORIZONTAL: 1" =	SECT. MGR.			
	PROJ. MGR.	RBW	10/31/11	
VERTICAL 1" =	RECOMMENDED: HBS 10/30/11			DIRECTOR
FILE: AE05	DRAWING: AE-5			DATE 10/28/2011
ATLAS PAGE NO:				SHEET 187 OF 261 SHEETS

9-28-11 B&V PROJECT NO. 145120

PLOTTED DATE:
SAVED DATE: FRE08341, 9/21/2011 5:17:37 PM
CYGNET ID: 145120-3000-C-B00DOR7Z6

F0145120
D145120D0WG

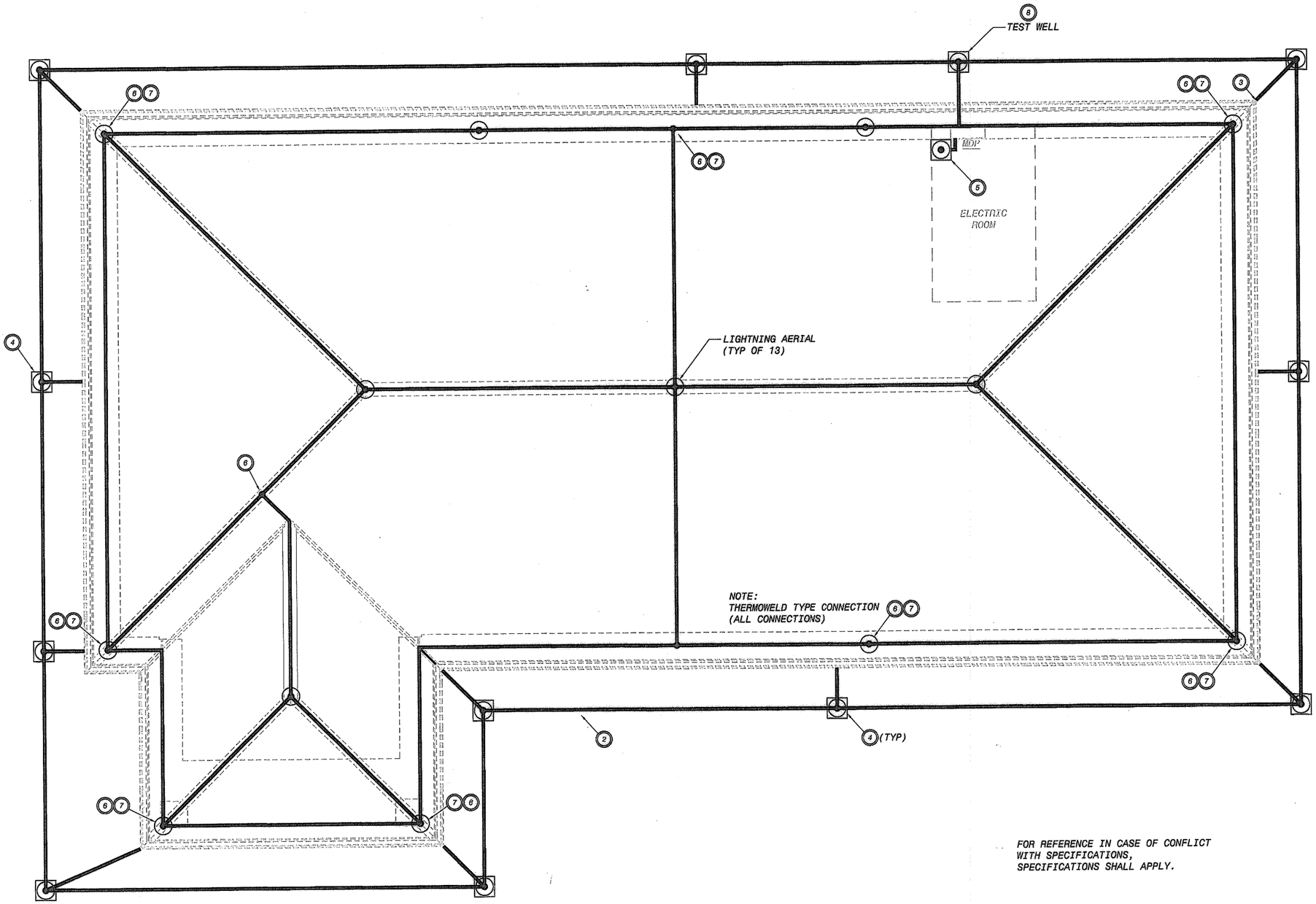

NOTES:

1. SEE SPECIFICATION SECTION 16050 FOR DETAILS ON GROUNDING MATERIAL AND INSTALLATION.
2. INSTALL BARE STRANDED 4/Ø CU, 18" BELOW FINAL GRADE.
3. EXOTHERMIC WELD, TYPICAL
4. EXOTHERMIC WELD GROUND ROD TO CONDUCTOR(S)
5. IN ELECTRICAL ROOM, BOND 4/Ø GROUND CONDUCTOR FROM GROUND LOOP TO GROUND BAR IN MDP. ALSO INSTALL GROUND ROD IN THE ELECTRICAL ROOM AND BOND CONDUCTOR TO GROUND BUS IN MDP. BOND TO BUILDING STEEL AND COLD WATER PIPE TO MDP GROUND BUS ALSO.
6. FURNISH AND INSTALL 4/0 COPPER DOWN CONDUCTOR IN 1" SCHEDULE 40 PVC IMBEDDED IN WALL. STUB OUT 18" BELOW FINAL GRADE AND BELOW ROOF INSIDE BUILDING. USE THRU-ROOF ASSEMBLY THAT IS SUITABLE FOR ROOF SYSTEM. COORDINATE WITH ARCH.
7. CONNECT DOWN CONDUCTOR TO GROUNDING SYSTEM WITH THERMOWELD TYPE CONNECTION.
8. INSTALL AND CONNECT GROUND TEST WELL WITH THERMOWELD TYPE CONNECTION.

SYMBOLS:

- GROUND ROD
- LIGHTNING ARRESTOR
- THERMOWELD CONNECTION

FOR REFERENCE IN CASE OF CONFLICT WITH SPECIFICATIONS, SPECIFICATIONS SHALL APPLY.

LIGHTNING PROTECTION AND GROUNDING PLAN

SCALE: 1/4"=1'-0"

LOWER BIRD CREEK WWTP EXPANSION
TMUA PROJECT NO. ES 2006-01
CONTRACT 1B

OPERATIONS BUILDING
ELECTRICAL
LIGHTNING PROTECTION AND GROUNDING PLAN

CITY OF TULSA, OKLAHOMA
TULSA METROPOLITAN UTILITY AUTHORITY
ENGINEERING SERVICES DEPARTMENT

PLANS AND ESTIMATES PREPARED BY:

BLACK & VEATCH Building a world of difference
Black & Veatch Corporation Kansas City, Missouri
Holloway, Updike and Dollon Consulting Engineers Muskogee · Broken Arrow
DYGATES Engineering Services

DEREK WAYNE GATES 16862 OKLAHOMA PROFESSIONAL ENGINEER
9-23-11

REVISION	BY	DATE

PLAN SCALE:	DRAWN	FLT		APPROVED:
	DESIGNED	AC		
	SURVEY			
PROFILE SCALE:	FIELD MGR.	TJB	10/11	
	SECT. MGR.			
HORIZONTAL: 1" =	PROJ. MGR.	RBW	10/31/11	
VERTICAL 1" =	RECOMMENDED: HAJ 10/30/11			DIRECTOR
FILE: AE06	DRAWING: AE-6			DATE 10/28/2011
ATLAS PAGE NO:				SHEET 188 OF 261 SHEETS

GJG 9-28-11

B&V PROJECT NO. 145120

PLOTTED DATE:
SAVED DATE: FREI08341, 9/21/2011 5:18:11 PM
CYGNET ID: 145120-3000-C-B000R726

FD145120
D145120DWG

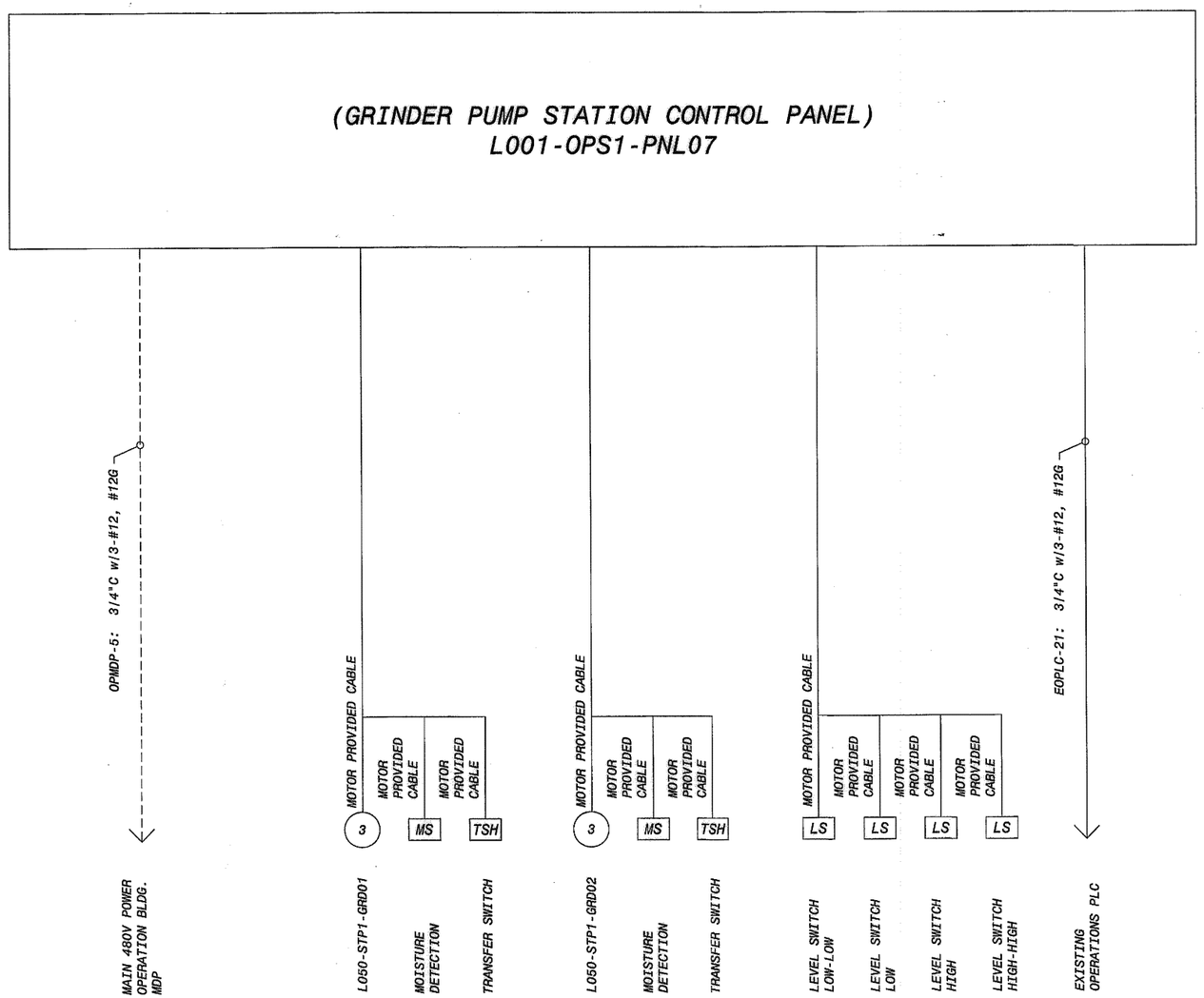

ONE-LINE DIAGRAM
SCALE: NONE

LOWER BIRD CREEK WWTP EXPANSION
TMUA PROJECT NO. ES 2006-01
CONTRACT 1B

OPERATIONS BUILDING
ELECTRICAL
ONE-LINE DIAGRAM

CITY OF TULSA, OKLAHOMA
TULSA METROPOLITAN UTILITY AUTHORITY
ENGINEERING SERVICES DEPARTMENT

PLANS AND ESTIMATES PREPARED BY:

BLACK & VEATCH Building a world of difference
Black & Veatch Corporation Kansas City, Missouri
Holloway, Updike and Bellen Consulting Engineers Muskogee · Broken Arrow
DWGATES Engineering Services

REVISION	BY	DATE

REGISTERED PROFESSIONAL ENGINEER DEREK WAYNE GATES 16842 OKLAHOMA
9-23-11

PLAN SCALE:	DRAWN	SS	APPROVED:
	DESIGNED	AC	
	SURVEY		
PROFILE SCALE:	FIELD MGR.	TOB 10/11	
HORIZONTAL: 1" =	SECT. MGR.		
	PROJ. MGR.	10/13/11	
VERTICAL 1" =	RECOMMENDED: HAS 10/30/11		DIRECTOR
FILE: AE07	DRAWING: AE-7		DATE 10/28/2011
ATLAS PAGE NO:			SHEET 189 OF 261 SHEETS

9-28-11 B&V PROJECT NO. 145120

PLOTTED DATE:
SAVED DATE: FRE08341, 9/21/2011 5:18:43 PM
CYGNET ID: 145120-300D-C-B0000R726

FD145120
D145120DWG

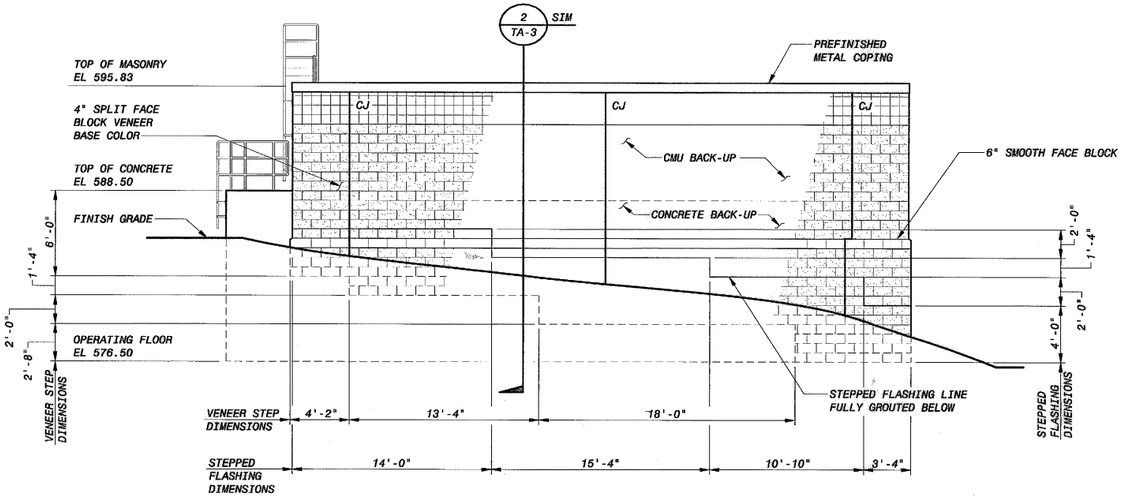

EAST ELEVATION
3/16" = 1'-0"

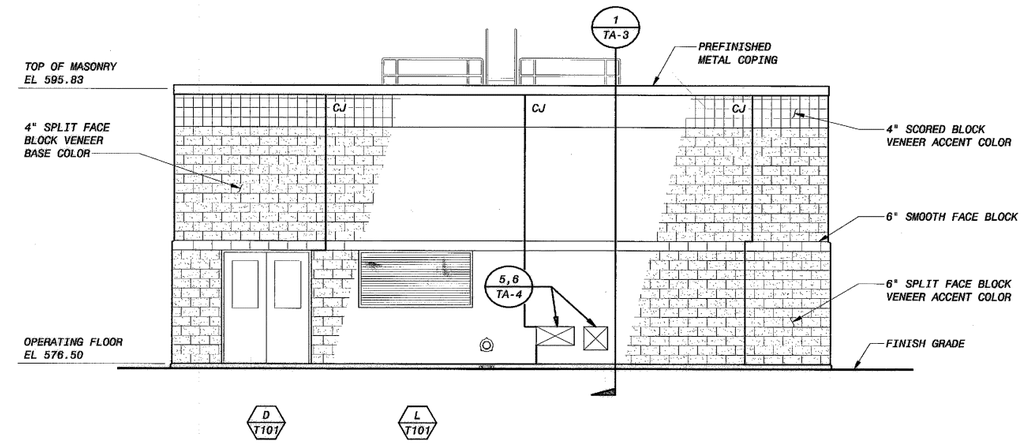

NORTH ELEVATION
3/16" = 1'-0"

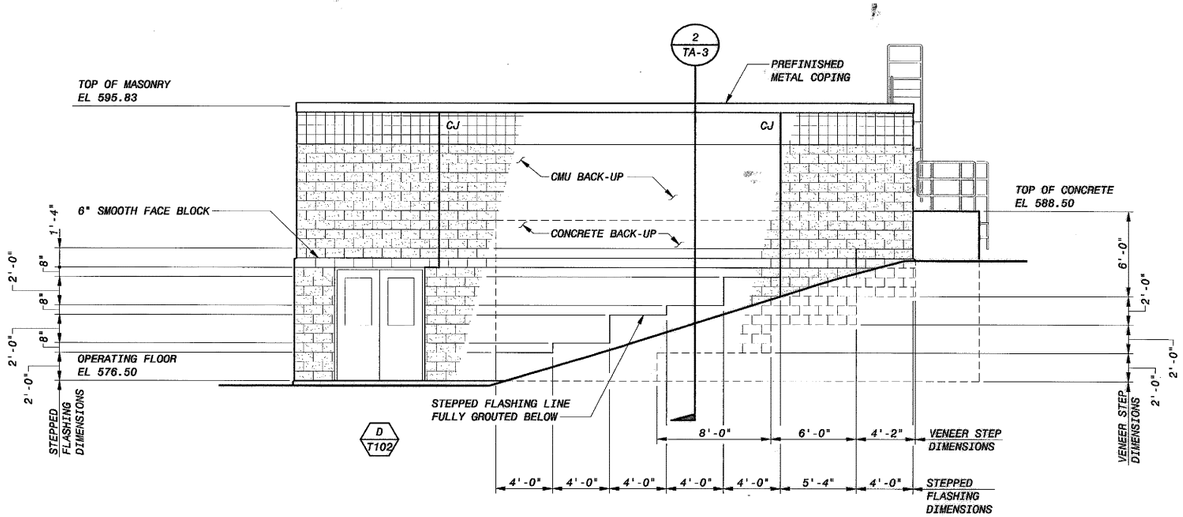

WEST ELEVATION
3/16" = 1'-0"

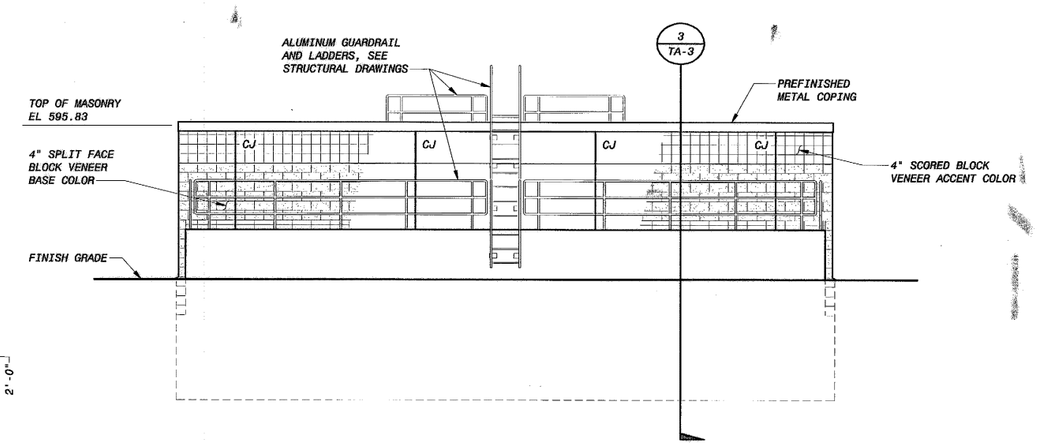

SOUTH ELEVATION
3/16" = 1'-0"

6' 4' 2' 0 5' 10'
3/16"=1'-0"

NOTES:

1. VENEER FACE BLOCK CONTROL JOINT (CJ). SEE STRUCTURAL DRAWINGS FOR BACKUP CONCRETE MASONRY UNITS (CMU) WALL CONTROL JOINT LOCATIONS.

LOWER BIRD CREEK WWTP EXPANSION
TMUA PROJECT NO. ES 2006-01
CONTRACT 1B

SLUDGE TRANSFER PUMP STATION
ARCHITECTURAL
BUILDING ELEVATIONS

CITY OF TULSA, OKLAHOMA
TULSA METROPOLITAN UTILITY AUTHORITY
ENGINEERING SERVICES DEPARTMENT

PLANS AND ESTIMATES PREPARED BY:

BLACK & VEATCH Building a world of difference. Black & Veatch Corporation Kansas City, Missouri

Holloway, Updike and Ballan Consulting Engineers Muskogee · Broken Arrow

DWGATES Engineering Services

STATE OF OKLAHOMA LOUIS E. ADAMS A5784 LICENSED ARCHITECT
09/23/2011

REVISION	BY	DATE

PLAN SCALE:	DRAWN	MDE		APPROVED:
	DESIGNED	PDR		
	SURVEY			
PROFILE SCALE:	FIELD MGR.	TDI	10/11	
HORIZONTAL: 1" =	SECT. MGR.			
	PROJ. MGR.	PBW	10/5/11	
VERTICAL 1" =	RECOMMENDED: HBJ 10/30/11			DIRECTOR
FILE: TA-01	DRAWING: TA-1			DATE 10/28/2011
ATLAS PAGE NO:				SHEET 190 OF 261 SHEETS

B&V PROJECT NO. 145120

PLOTTED DATE: EDM17043, 9/21/2011 9:07:16 AM
SAVED DATE: EDM17043, 9/20/2011 2:42:28 PM
CYGNET ID: 145120-3000-A-BD000WAMK

F0145120
D0145126BV

HBJ 9-29-11

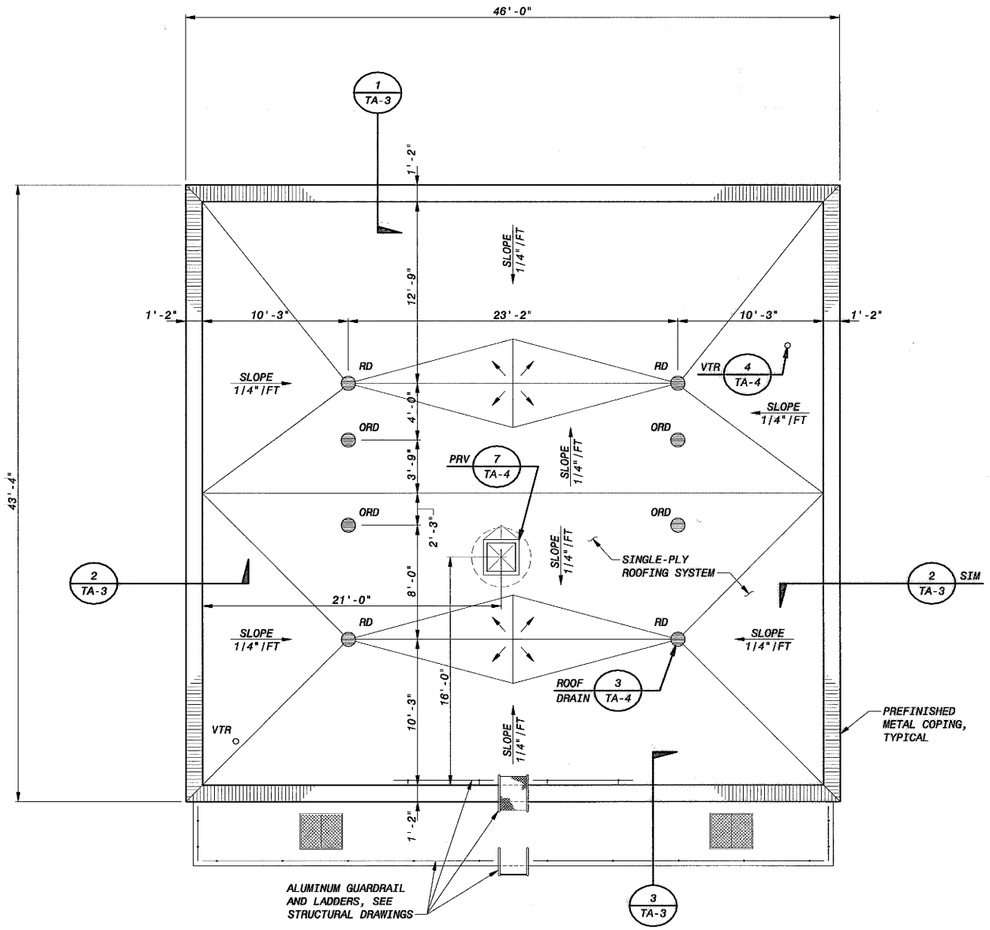

ROOF PLAN
3/16" = 1'-0"

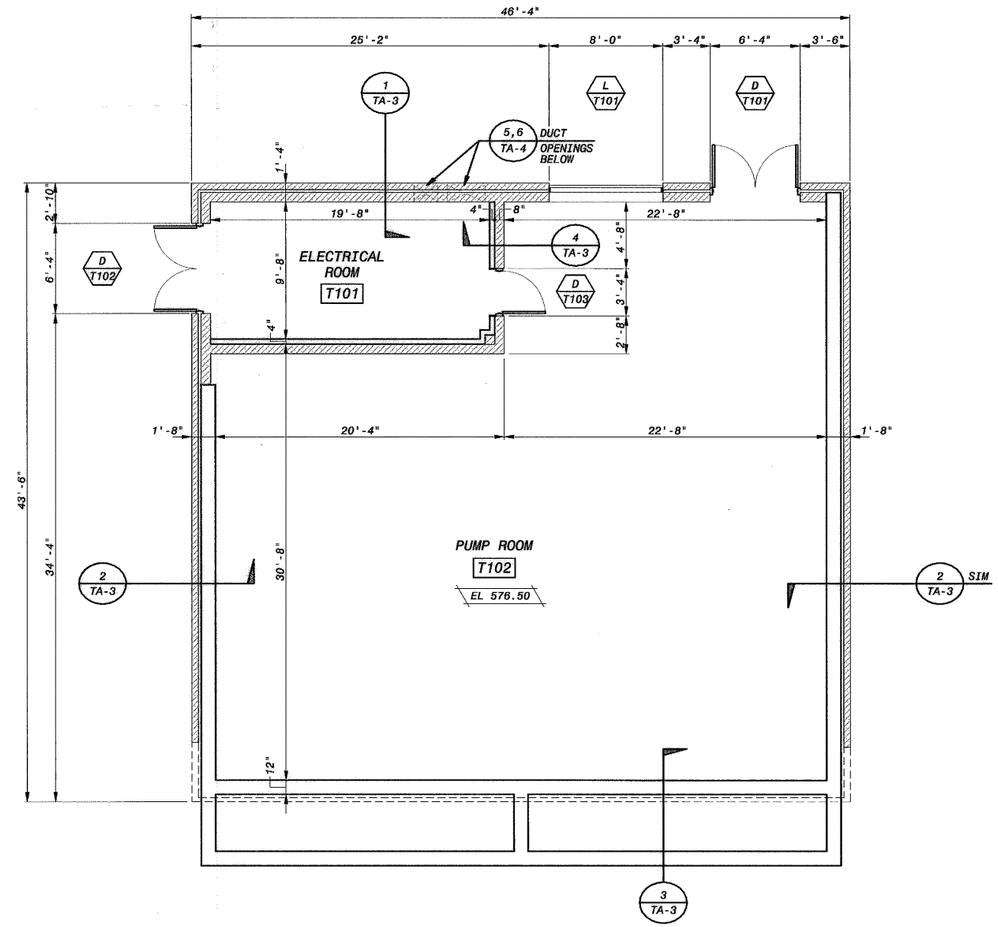

FLOOR PLAN
3/16" = 1'-0"

6' 4' 2' 0 5' 10'
3/16"=1'-0"

LOWER BIRD CREEK WWTP EXPANSION
TMUA PROJECT NO. ES 2006-01
CONTRACT 1B

SLUDGE TRANSFER PUMP STATION
ARCHITECTURAL
FLOOR PLAN AND ROOF PLAN

CITY OF TULSA, OKLAHOMA
TULSA METROPOLITAN UTILITY AUTHORITY
ENGINEERING SERVICES DEPARTMENT

PLANS AND ESTIMATES PREPARED BY:

BLACK & VEATCH Building a world of difference
Black & Veatch Corporation Kansas City, Missouri
Holloway, Updike and Bellan Consulting Engineers Muskogee · Broken Arrow
BWGATES Engineering Services

STATE OF OKLAHOMA
ROBERT E. HOUSE
A5784
LICENSED ARCHITECT
09/23/2011

REVISION	BY	DATE

PLAN SCALE:	DRAWN	MDE	APPROVED:
	DESIGNED	PDR	
	SURVEY		
PROFILE SCALE:	FIELD MGR.	TJS 10/11	
HORIZONTAL: 1" =	SECT. MGR.		
	PROJ. MGR.	TDM 10/31/11	
VERTICAL 1" =	RECOMMENDED: HAB 10/30/11		DIRECTOR
FILE: TA-02	DRAWING: TA-2		DATE 10/28/2011
ATLAS PAGE NO:			SHEET 191 OF 261 SHEETS

REB 9-23-11

B&V PROJECT NO. 145120

PLOTTED DATE: EDM17043, 9/21/2011 9:10:21 AM
SAVED DATE: EDM17043, 9/20/2011 2:51:02 PM
CYONET ID: 44229-5005-4.B5000M4.5T

ED145120
D145120V

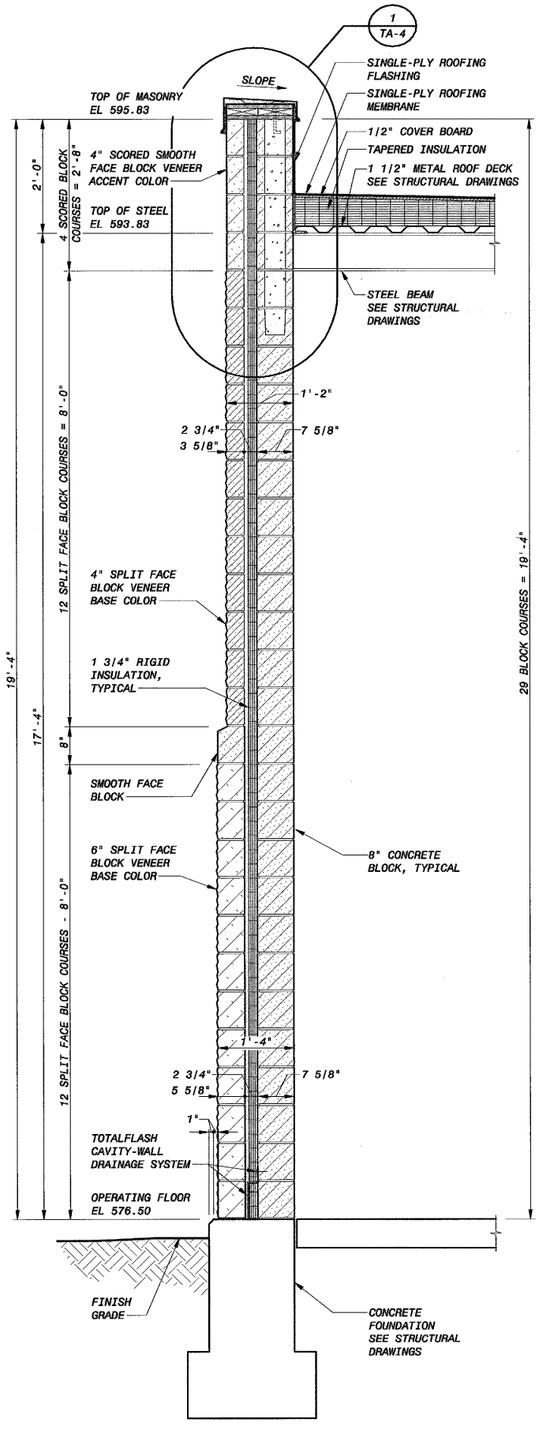

SECTION 1/TA-1,TA-2
3/4" = 1'-0"

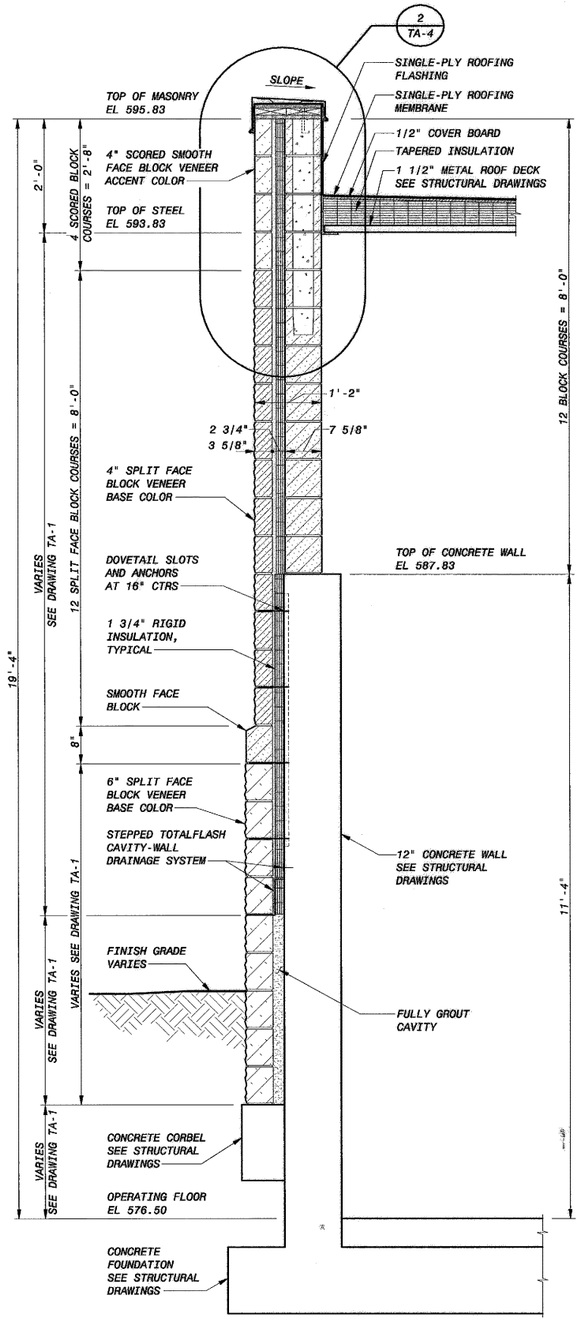

SECTION 2/TA-1,TA-2
3/4" = 1'-0"

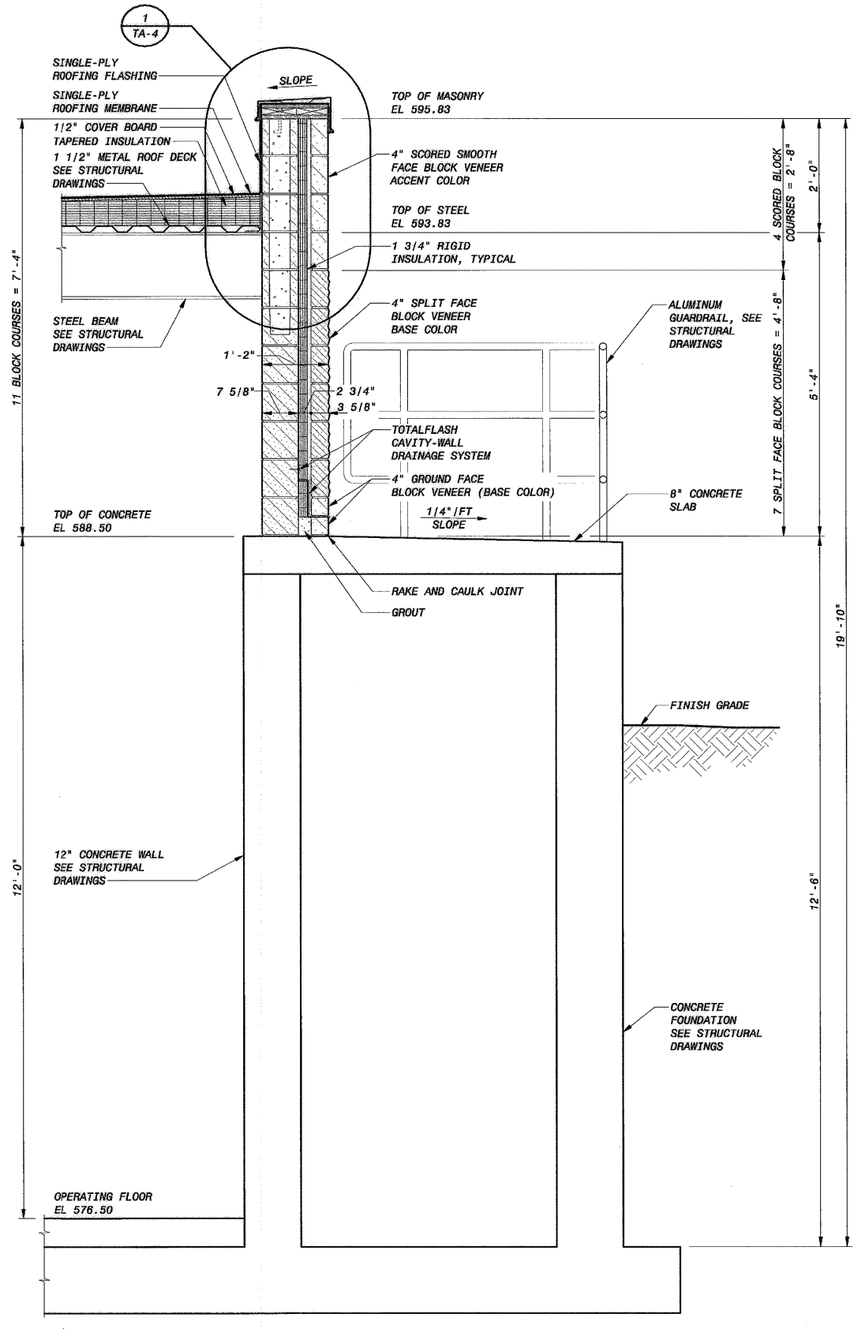

SECTION 3/TA-1,TA-2
3/4" = 1'-0"

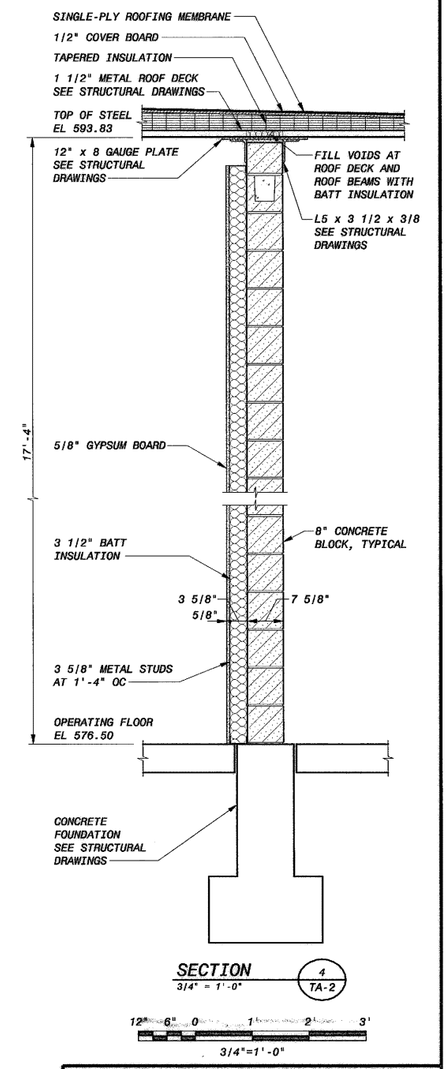

SECTION 4/TA-2
3/4" = 1'-0"

12" 6" 0 1' 2' 3'
3/4"=1'-0"

NOTES:

1. FOR VERTICAL REINFORCING, BOND BEAM LOCATIONS AND WALL PENETRATIONS. SEE STRUCTURAL DRAWINGS
2. SEE SPECIFICATION SECTION 04200 BUILDING MASONRY FOR HORIZONTAL JOINT REINFORCING

STATE OF OKLAHOMA
ACUS E. ALEXANDER
A5784
LICENSED ARCHITECT
09/23/2011

REVISION	BY	DATE

LOWER BIRD CREEK WWTP EXPANSION
TMUA PROJECT NO. ES 2006-01
CONTRACT 1B

SLUDGE TRANSFER PUMP STATION
ARCHITECTURAL
WALL SECTIONS

CITY OF TULSA, OKLAHOMA
TULSA METROPOLITAN UTILITY AUTHORITY
ENGINEERING SERVICES DEPARTMENT

PLANS AND ESTIMATES PREPARED BY:

BLACK & VEATCH Building a world of difference. Black & Veatch Corporation Kansas City, Missouri
Holloway, Updike and Bollen Consulting Engineers Muskogee · Broken Arrow
OWCATES Engineering Services

PLAN SCALE:	DRAWN	MDE		APPROVED:
	DESIGNED	PDR		
	SURVEY			
PROFILE SCALE:	FIELD MGR.	TOB	10/11	
HORIZONTAL: 1" =	SECT. MGR.			
	PROJ. MGR.	TBW	10/31/11	
VERTICAL 1" =	RECOMMENDED: HAS 10/30/11			DIRECTOR
FILE: TA-03	DRAWING: TA-3			DATE 10/28/2011
ATLAS PAGE NO:				SHEET 192 OF 261 SHEETS

HAS 9-28-11

B&V PROJECT NO. 145120

PLOTTED DATE: EDM17043, 9/21/2011 9:07:55 AM
SAVED DATE: EDM17043, 9/20/2011 2:53:03 PM
CYGNET ID: 145120-S000-A-B00001#P1

FD145120
D145120BV

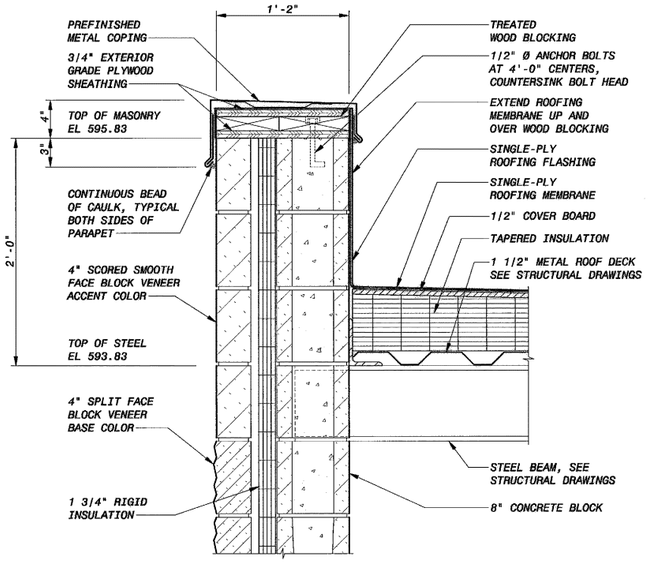

DETAIL 1 (TA-3)
1 1/2" = 1'-0"

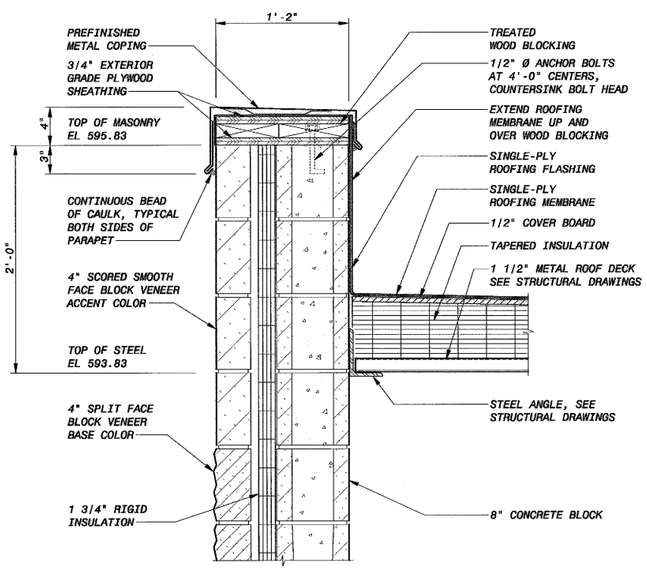

DETAIL 2 (TA-3)
1 1/2" = 1'-0"

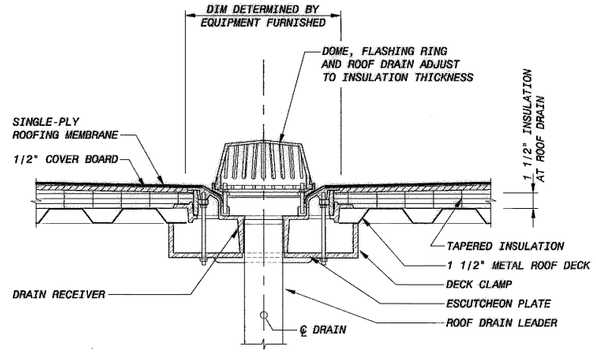

DETAIL 3 (TA-2)
1 1/2" = 1'-0"

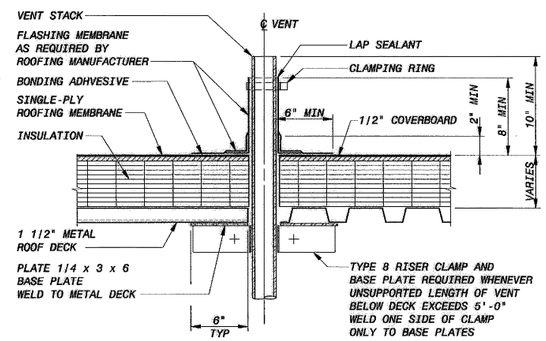

DETAIL 4 (TA-2)
1 1/2" = 1'-0"

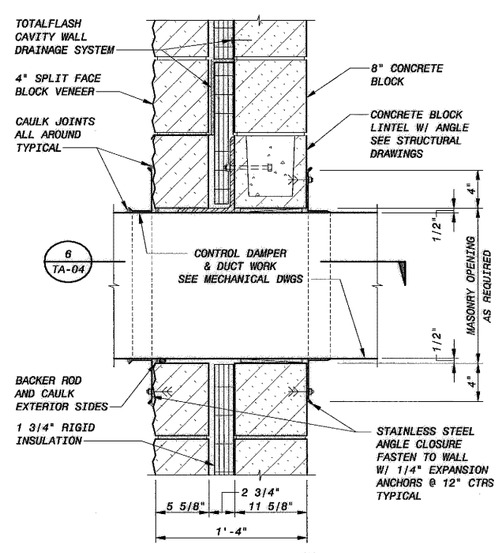

DETAIL 5 (TA-1, TA-2)
1 1/2" = 1'-0"

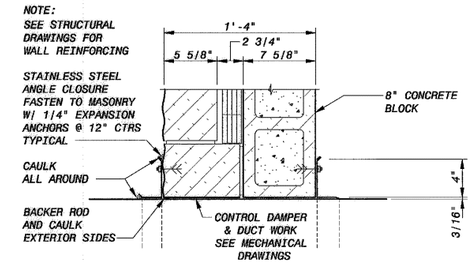

DETAIL 6 (TA-1, TA-2)
1 1/2" = 1'-0"

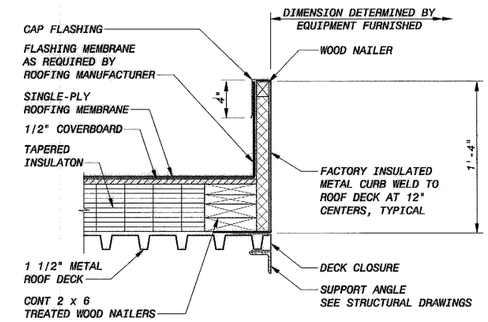

DETAIL 7 (TA-2)
1 1/2" = 1'-0"

12" 9" 6" 3" 0 1'
1 1/2"=1'-0"

LOWER BIRD CREEK WWTP EXPANSION
TMUA PROJECT NO. ES 2006-01
CONTRACT 1B

SLUDGE TRANSFER PUMP STATION
ARCHITECTURAL
MISCELLANEOUS DETAILS

CITY OF TULSA, OKLAHOMA
TULSA METROPOLITAN UTILITY AUTHORITY
ENGINEERING SERVICES DEPARTMENT

PLANS AND ESTIMATES PREPARED BY:

BLACK & VEATCH Building a world of difference. Black & Veatch Corporation Kansas City, Missouri

Holloway, Lipsitz and Bellon Consulting Engineers Muskogee - Broken Arrow

DWGATES Engineering Services

STATE OF OKLAHOMA LICENSED ARCHITECT ACLISS E. NEILSON A5784 09/23/2011

REVISION	BY	DATE

PLAN SCALE:	DRAWN	MDE	APPROVED:
	DESIGNED	PDR	
	SURVEY		
PROFILE SCALE:	FIELD MGR.	TOB 10/11	
HORIZONTAL: 1" =	SECT. MGR.		
	PROJ. MGR.	TOB 10/6/11	
VERTICAL 1" =	RECOMMENDED: HAJ 10/24/11		DIRECTOR
FILE: TA-04	DRAWING: TA-4		DATE 10/28/2011
ATLAS PAGE NO:			SHEET 193 OF 261 SHEETS

9-28-11

B&V PROJECT NO. 145120

PLOTTED DATE: EDM17043, 9/21/2011 9:08:34 AM
SAVED DATE: EDM17043, 9/20/2011 2:56:03 PM
CYGNET ID: 145120-3000-A-B0C0W6F1

FD145120
D145120BV

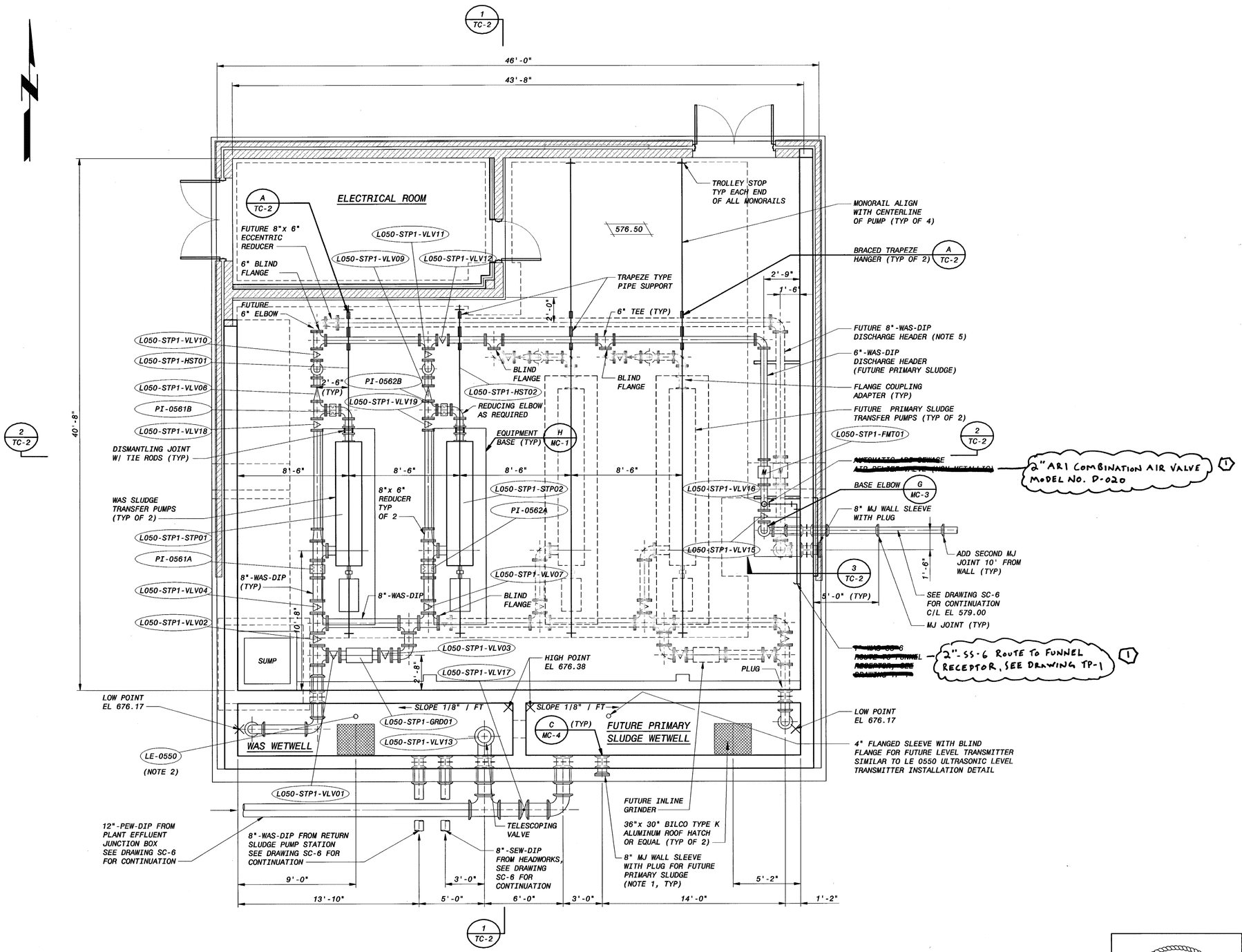

SLUDGE TRANSFER PUMP STATION
OPERATING FLOOR PLAN
1/4" = 1'-0"

NOTES:

1. ALL MECHANICAL JOINT WALL PIPES SHALL BE RESTRAINED ON BOTH SIDES OF THE WALL UNLESS OTHERWISE NOTED.
2. SEE INSTRUMENTATION FOR INSTALLATION DETAIL FOR ULTRASONIC LEVEL TRANSMITTER.
3. DISMANTLING JOINT SHALL HAVE A 275 PSI RATING, WITH FLANGE DRILLING FOR ANSI CLASS 125 BOLT CIRCLE (ROMAC DJ 400 WITH CLASS E FLANGE AND ANSI 125 DRILLING OR EQUAL).
4. ALL PIPING SHALL BE SUPPORTED IN ACCORDANCE WITH SPECIFICATION 15140. PIPE SUPPORTS FOR THE SLUDGE DISCHARGE PIPING ARE SHOWN AND SHALL NOT BE RELOCATED WITHOUT APPROVAL OF ENGINEER.
5. FUTURE PLANT EXPANSIONS WILL ADD PRIMARY CLARIFIERS. THE PRIMARY SLUDGE WILL BE CONVEYED TO THE FUTURE PRIMARY SLUDGE WETWELL. VALVE L050-STP1-VLV12 WILL BE CLOSED TO DIVIDE THE DISCHARGE HEADER, WAS WILL FLOW TO THE WEST, THEN THROUGH THE 180° DOUBLE ELBOWS THROUGH THE FUTURE 8" WAS DISCHARGE HEADER WHILE PRIMARY SLUDGE WILL FLOW EAST THROUGH THE ORIGINAL 6" WAS DISCHARGE HEADER (FUTURE PRIMARY SLUDGE).
6. MANUAL RECIRCULATION VALVES SHALL BE OPENED PRIOR TO STARTING THE CORRESPONDING PUMP. RECIRCULATION VALVE SHALL BE SLOWLY CLOSED OVER A PERIOD OF APPROXIMATELY 5 MINUTES. THE RECIRCULATION VALVE SHALL BE CLOSED SLOWLY ENOUGH TO KEEP DISCHARGE PRESSURE BELOW 225 PSIG. TO SWITCH WHICH PUMP IS OPERATING, THE PUMP THAT IS INITIALLY ON SHALL BE SLOWLY RAMPED DOWN USING THE AFD, WHILE THE PUMP THAT IS INITIALLY OFF SHALL BE STARTED ONCE THE OPERATING PUMP IS AT LESS THAN 80%, AND SLOWLY RAMPED UP AT THE SAME RATE THE OTHER PUMP IS RAMPED DOWN.

LOWER BIRD CREEK WWTP EXPANSION
TMUA PROJECT NO. ES 2006-01
CONTRACT 1B

SLUDGE TRANSFER PUMP STATION
CIVIL
OPERATING FLOOR PLAN

CITY OF TULSA, OKLAHOMA
TULSA METROPOLITAN UTILITY AUTHORITY
ENGINEERING SERVICES DEPARTMENT

PLANS AND ESTIMATES PREPARED BY:

BLACK & VEATCH Building a world of difference — Black & Veatch Corporation, Kansas City, Missouri
Holloway, Updike and Bollen, Consulting Engineers, Muskogee · Broken Arrow
DWGATES Engineering Services

REVISION	BY	DATE
Addendum No. 1	PSB	1-6-12

REGISTERED PROFESSIONAL ENGINEER — KURT ARLAN RONNEKAMP — 17439 — OKLAHOMA

PLAN SCALE:	DRAWN	JKS	APPROVED:
	DESIGNED	AWL	
	SURVEY		
PROFILE SCALE:	FIELD MGR.	TCD 10/11	
HORIZONTAL: 1" =	SECT. MGR.		
	PROJ. MGR.	PBW 10/31/11	
VERTICAL 1" =	RECOMMENDED: HAS 10/31/11		DIRECTOR
FILE:	DRAWING: TC-1		DATE 10/28/2011
ATLAS PAGE NO:			SHEET 194 OF 261 SHEETS

PSB 9-28-11

B&V PROJECT NO. 145120

PLOTTED DATE: 9/21/2011 5:04:55 PM, Batch Plot
SAVED DATE: TRE28435, 9/21/2011 12:00:36 PM
CYGNET ID: 145120-30000-M-B0000N31H

FD145120
D145120BV

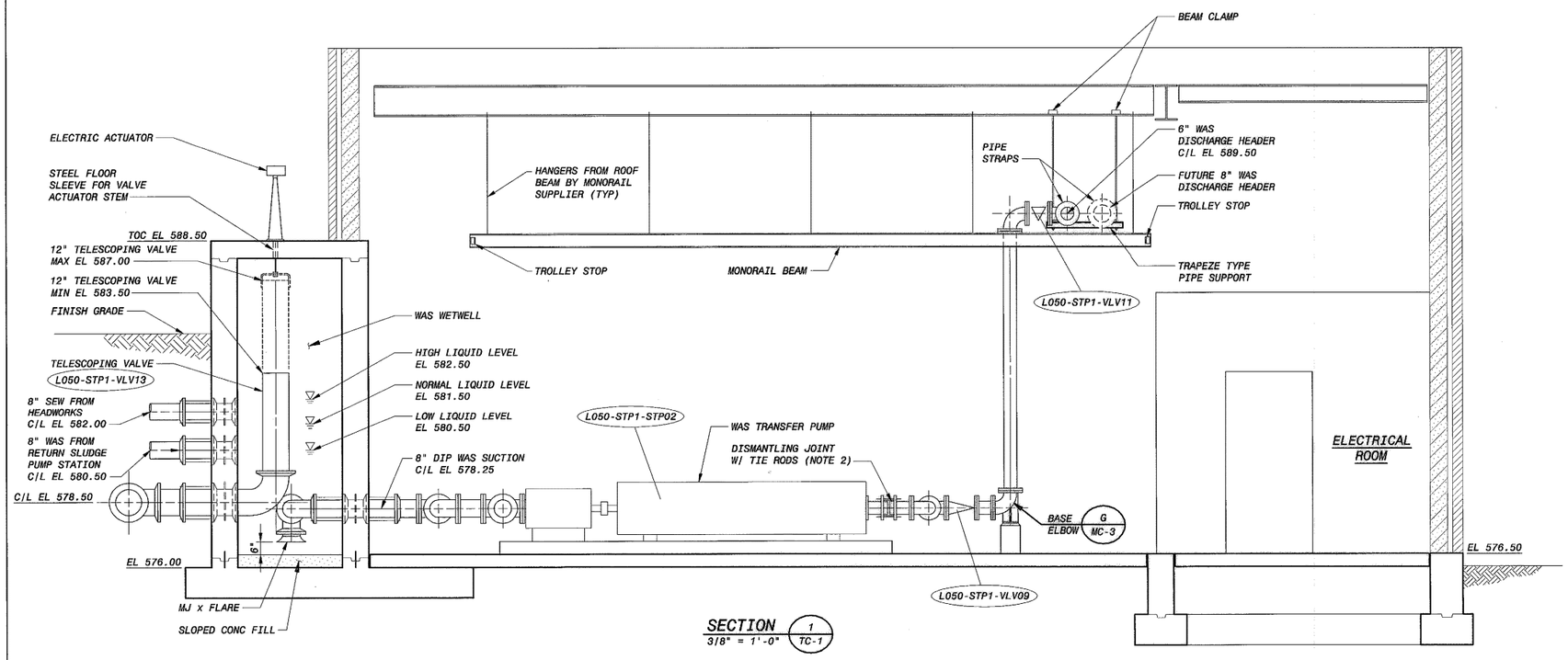

SECTION 1 / TC-1
3/8" = 1'-0"

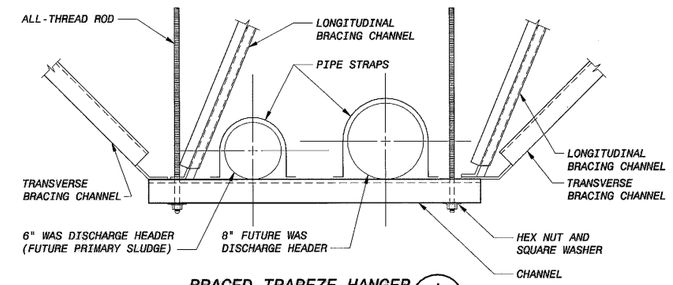

BRACED TRAPEZE HANGER A / TC-1
NO SCALE

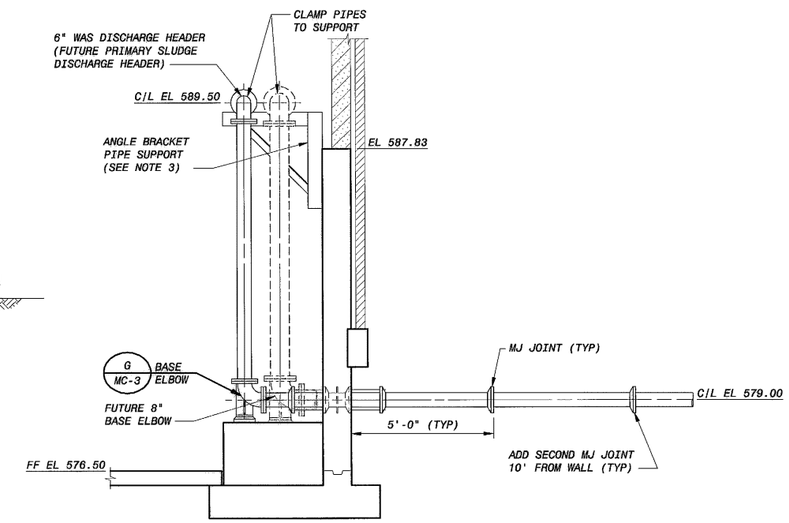

SECTION 3 / TC-1
3/8" = 1'-0"

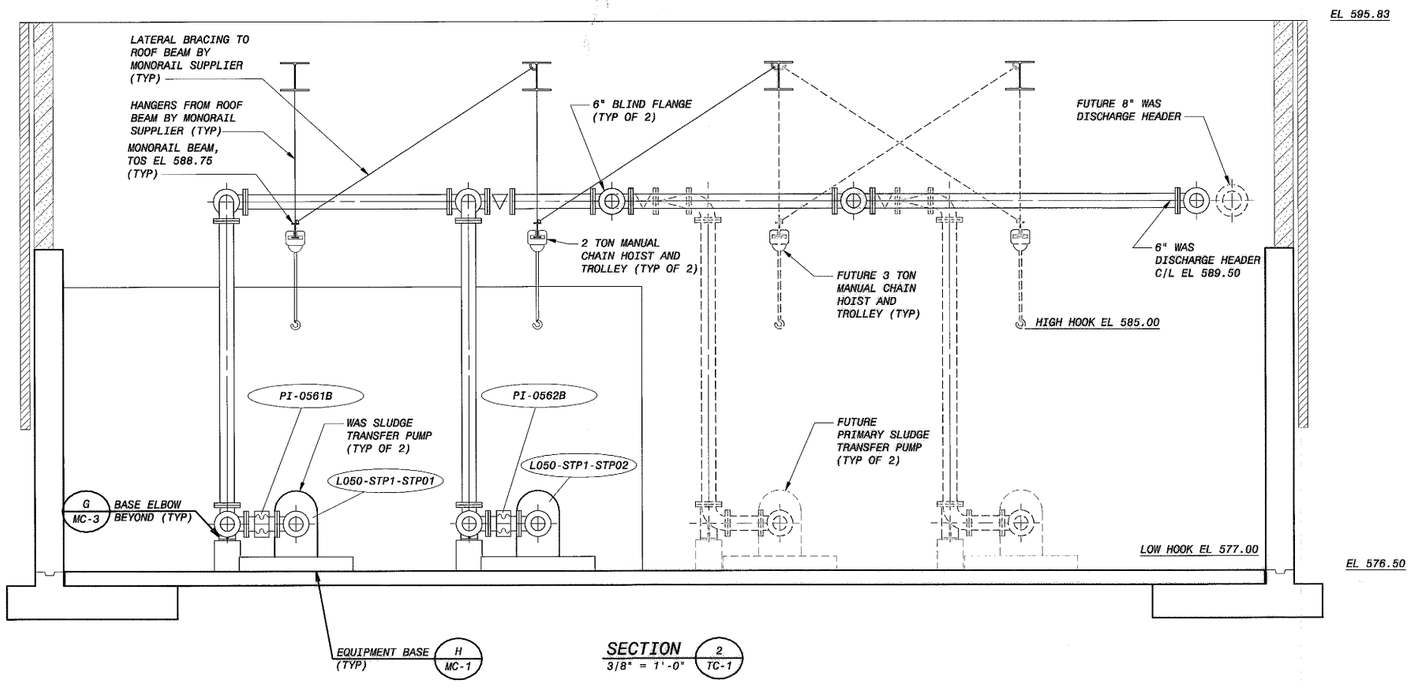

SECTION 2 / TC-1
3/8" = 1'-0"

NOTES:

1. CONTRACTOR SHALL DESIGN THE BRACED TRAPEZE HANGER FOR A VERTICAL LOAD OF 1500 POUNDS, A TRANSVERSE LOAD OF 1500 POUNDS, AND A LONGITUDINAL LOAD OF 500 POUNDS.
2. DISMANTLING JOINT SHALL HAVE A 275 PSI RATING, WITH FLANGE DRILLING FOR ANSI CLASS 125 BOLT CIRCLE (ROMAC DJ 400 WITH CLASS E FLANGE AND ANSI 125 DRILLING OR EQUAL).
3. CONTRACTOR SHALL DESIGN ANGLE BRACKET PIPE SUPPORT FOR A VERTICAL LOAD OF 1500 POUNDS, A TRANSVERSE LOAD OF 3000 POUNDS, AND A LONGITUDINAL LOAD OF 500 POUNDS.

LOWER BIRD CREEK WWTP EXPANSION
TMUA PROJECT NO. ES 2006-01
CONTRACT 1B

SLUDGE TRANSFER PUMP STATION
CIVIL
SECTIONS AND DETAILS

CITY OF TULSA, OKLAHOMA
TULSA METROPOLITAN UTILITY AUTHORITY
ENGINEERING SERVICES DEPARTMENT

PLANS AND ESTIMATES PREPARED BY:
BLACK & VEATCH Building a world of difference. Black & Veatch Corporation Kansas City, Missouri
Holloway, Updike and Bellon Consulting Engineers Muskogee · Broken Arrow
D.W. GATES Engineering Services

REGISTERED PROFESSIONAL ENGINEER KURT ARDAN RONNEKAMP 17439 OKLAHOMA 9-23-11

REVISION	BY	DATE

PLAN SCALE:	DRAWN	JKS	APPROVED:
	DESIGNED	AWL	
	SURVEY		
PROFILE SCALE:	FIELD MGR.	'TOB 10/11	
HORIZONTAL: 1" =	SECT. MGR.		
	PROJ. MGR.	BRN 10/3/11	
VERTICAL 1" =	RECOMMENDED:	HAS 10/3/11	DIRECTOR
FILE:	DRAWING: TC-2		DATE 10/28/2011
ATLAS PAGE NO:			SHEET 195 OF 261 SHEETS

JBB 9-23-11

B&V PROJECT NO. 145120

PLOTTED DATE: 9/21/2011 5:06:06 PM, Batch Plot
SAVED DATE: TRE28435, 9/21/2011 2:47:35 PM
CYGNET ID: 145120-3000-C-B0000W403

FD145120
D145120BV

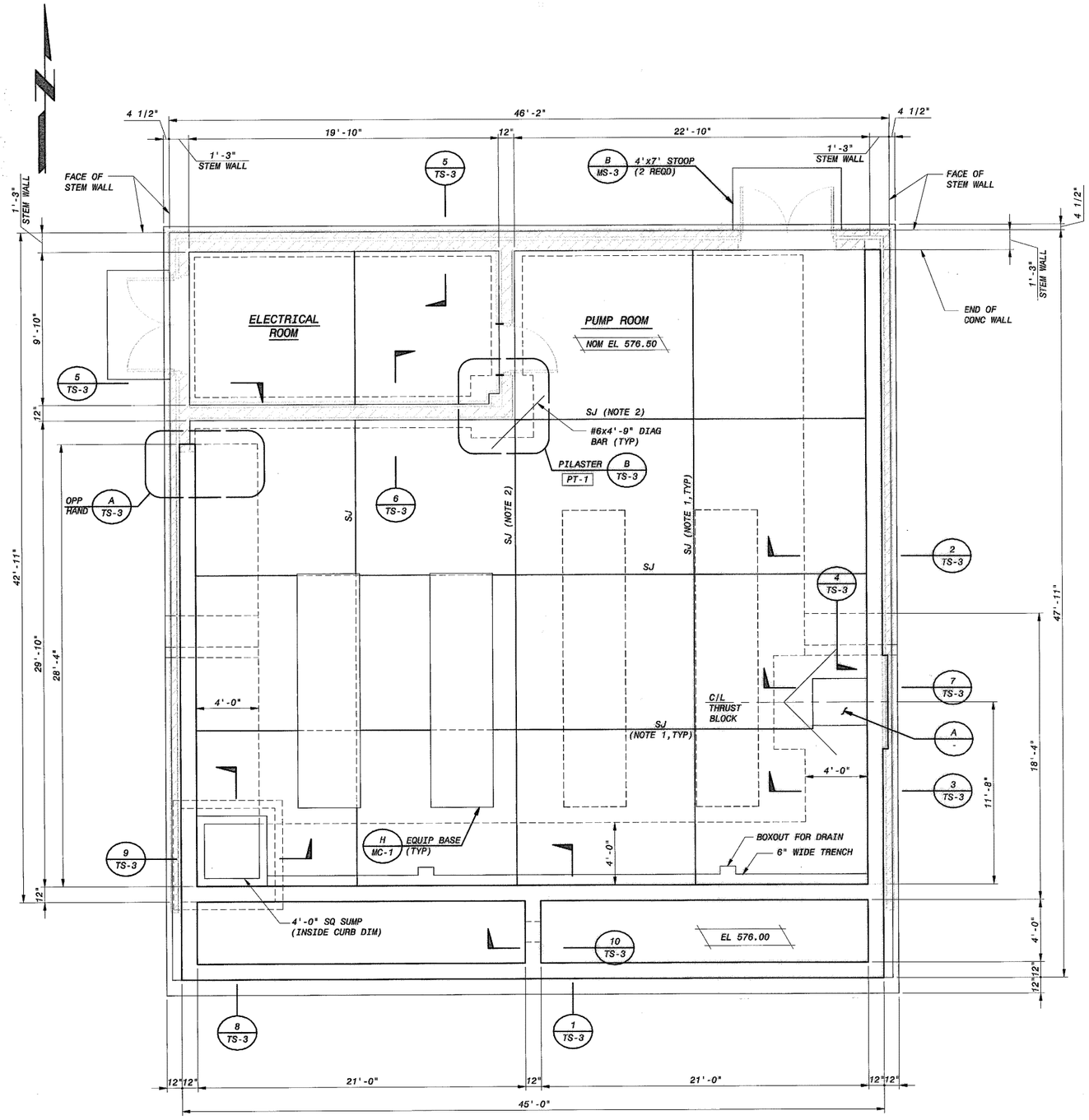

FOUNDATION PLAN

1/4" = 1'-0"

NOTES:

1. MAXIMUM SAWCUT JOINT SPACING = 12'-0".
2. LOCATE SAWCUT JOINT AT RENTRANT CORNER OF PUMP ROOM.

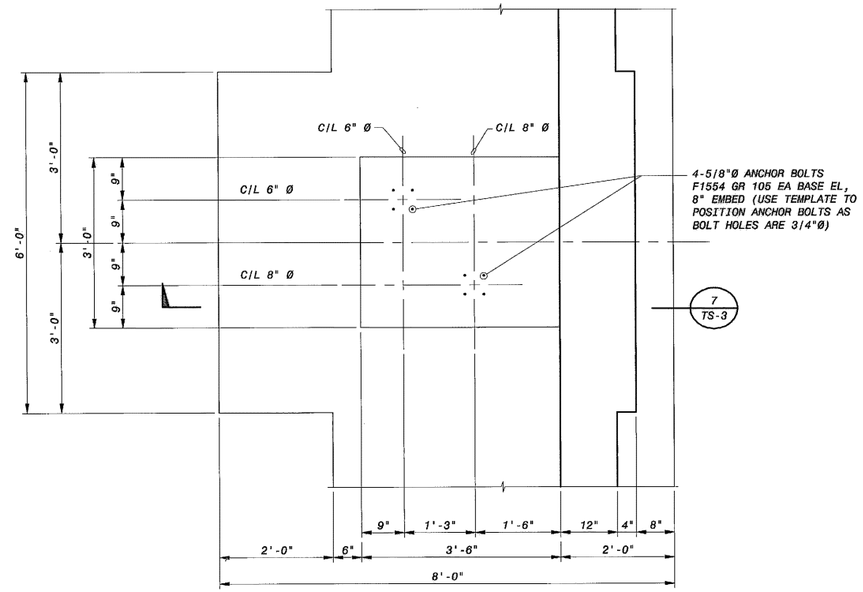

THRUST BLOCK DETAIL

3/4" = 1'-0"

A -

REGISTERED PROFESSIONAL ENGINEER DENNIS LYNN WOOD 13651 OKLAHOMA 9/23/11

REVISION	BY	DATE

LOWER BIRD CREEK WWTP EXPANSION
TMUA PROJECT NO. ES 2006-01
CONTRACT 1B

SLUDGE TRANSFER PUMP STATION
STRUCTURAL
FOUNDATION PLAN

CITY OF TULSA, OKLAHOMA
TULSA METROPOLITAN UTILITY AUTHORITY
ENGINEERING SERVICES DEPARTMENT

PLANS AND ESTIMATES PREPARED BY:

BLACK & VEATCH Building a world of difference. Black & Veatch Corporation Kansas City, Missouri

Holloway, Updike and Ballou Consulting Engineers Muskogee · Broken Arrow

DWGATES Engineering Services

PLAN SCALE:	DRAWN	RR		APPROVED:
	DESIGNED	DLW		
	SURVEY			
PROFILE SCALE:	FIELD MGR.	TOB	10/11	
	SECT. MGR.			
HORIZONTAL: 1" =	PROJ. MGR.	PBW	10/3/11	
VERTICAL 1" =	RECOMMENDED:	HB	10/20/11	DIRECTOR
FILE: TA-02	DRAWING: TS-1			DATE 10/28/2011
ATLAS PAGE NO:				SHEET 196 OF 261 SHEETS

B&V PROJECT NO. 145120

9-28-11

PLOTTED DATE: GHA53300, 6/10/2011 11:28:23 AM
SAVED DATE: MCK02572, 9/21/2011 10:05:45 AM
CYGNET ID: 145120-3000-S-B000W50T

F0145120
D145120BV

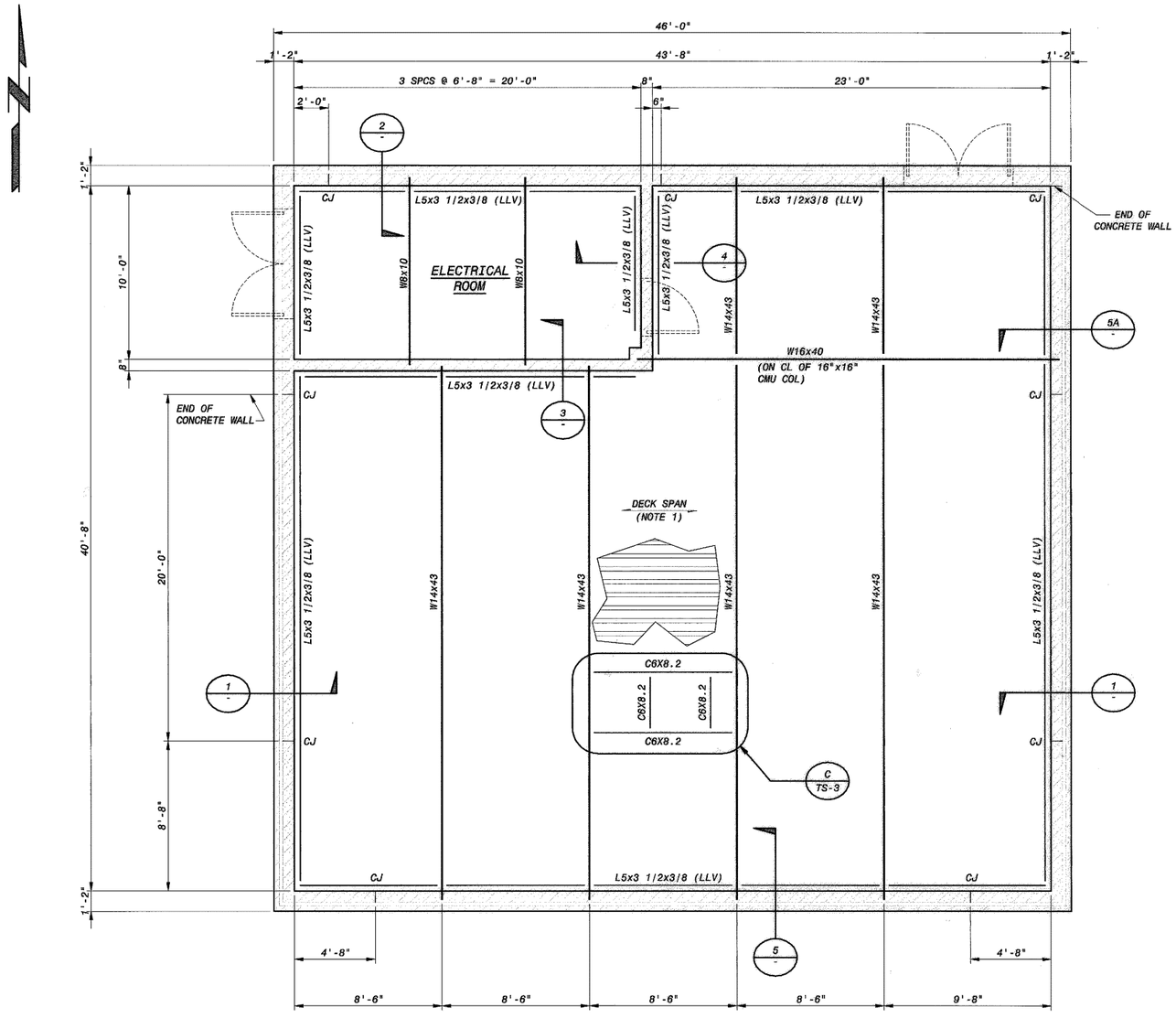

SLUDGE TRANSFER PUMP STATION
ROOF FRAMING PLAN @ TOS EL 593.83 (UNO)
CMU CONTROL JOINT LOCATION PLAN

1/4" = 1'-0"

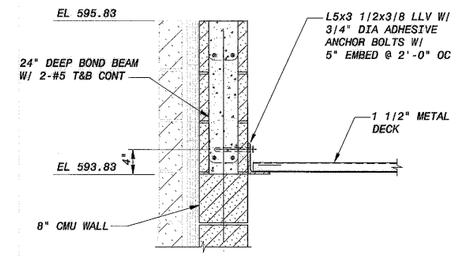

SECTION 1
1" = 1'-0"

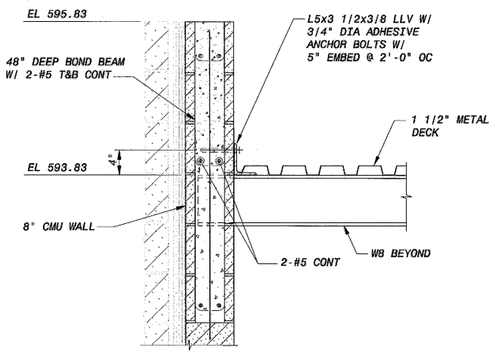

SECTION 2
1" = 1'-0"

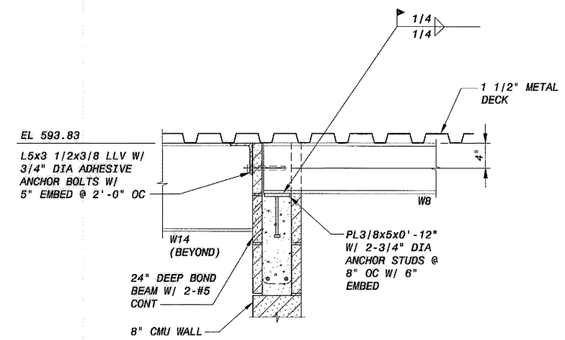

SECTION 3
1" = 1'-0"

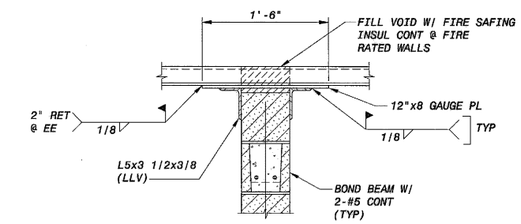

SECTION 4
1" = 1'-0"

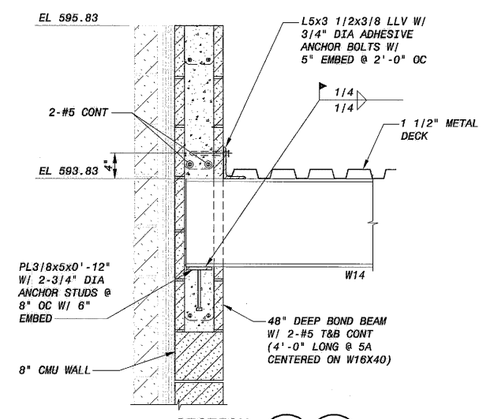

SECTION 5 / 5A
1" = 1'-0"

NOTES:

1. ROOF DECK SHALL BE 1 ½" 18 GAGE, TYPE B WIDE RIB. SECURE DECK PANELS TO INTERIOR SUPPORTS WITH #12 TEK SCREWS AT 12" CENTER TO CENTER AND TO PERIMETER SUPPORTS WITH #12 TEK SCREWS AT 6" CENTER TO CENTER. SECURE DECK PANELS TO EACH OTHER AT SIDELAPS WITH #10 TEK SCREWS AT 17" CENTER TO CENTER (MAXIMUM).

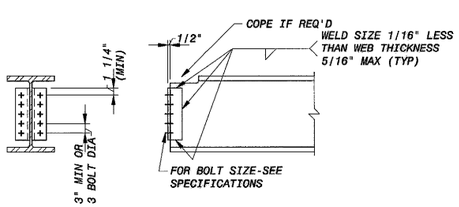

SHOP WELDED - FIELD BOLTED		
BEAM SIZE (ALL WEIGHTS)	NO OF BOLTS IN OSL	ANGLE SIZE
W16 & W18, S15 & S18 C15, MC18	8	2L'S 4x3x3/8
W12 & W14, M12 & M14, S12 C12, MC12 & MC13	6	2L'S 4x3x3/8
W8 & W10, M8 & M10, S8 & S10 C8, C9 & C10, MC8, MC9 & MC10	4	2L'S 4x3x3/8
W6, M6, S6 & S7 C6 & C7, MC6 & MC7	2	2L'S 4x3x3/8

NOTE: FABRICATOR SHALL PROVIDE ADDITIONAL CLIPS, SEATS, BOLTS, ETC AS REQUIRED TO COMPLY WITH OSHA SAFETY STANDARDS FOR STEEL ERECTION.

STANDARD FRAMING CONNECTIONS

LOWER BIRD CREEK WWTP EXPANSION
TMUA PROJECT NO. ES 2006-01
CONTRACT 1B

SLUDGE TRANSFER PUMP STATION
STRUCTURAL
ROOF PLAN

CITY OF TULSA, OKLAHOMA
TULSA METROPOLITAN UTILITY AUTHORITY
ENGINEERING SERVICES DEPARTMENT

PLANS AND ESTIMATES PREPARED BY:

BLACK & VEATCH Building a world of difference. — Black & Veatch Corporation, Kansas City, Missouri
Holloway, Lipsitz and Betlen Consulting Engineers, Muskogee · Broken Arrow
D.W. GATES Engineering Services

REGISTERED PROFESSIONAL ENGINEER — DENNIS LYNN WOOD 13651 — OKLAHOMA — 9/23/11

REVISION	BY	DATE

PLAN SCALE:	DRAWN	RR	APPROVED:
	DESIGNED	DLW	
	SURVEY		
PROFILE SCALE:	FIELD MGR.	JCB 10/11	
HORIZONTAL: 1" =	SECT. MGR.		
	PROJ. MGR.	CBV 10/31/11	
VERTICAL 1" =	RECOMMENDED:	HAS 10/31/11	DIRECTOR
FILE:	DRAWING: TS-2		DATE 10/28/2011
ATLAS PAGE NO:			SHEET 197 OF 261 SHEETS

JCB 9-28-11 B&V PROJECT NO. 145120

PLOTTED DATE: GHA53300, 6/10/2011 11:27:59 AM
SAVED DATE: MCK02672, 9/21/2011 10:06:56 AM
CYGNET ID: 145120-3000-S-B0000W42Q

FD145120
D145120BV

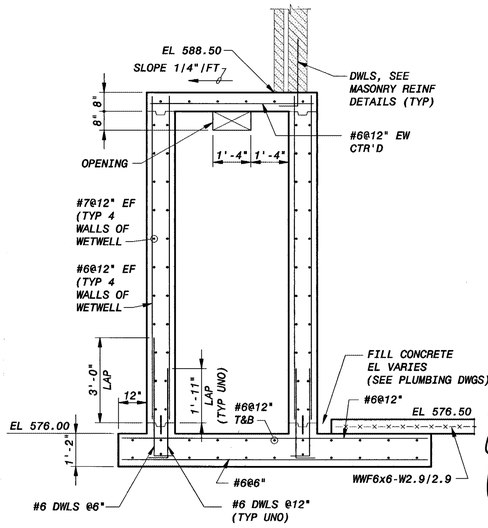

SECTION 1 (TS-1)
3/8" = 1'-0"

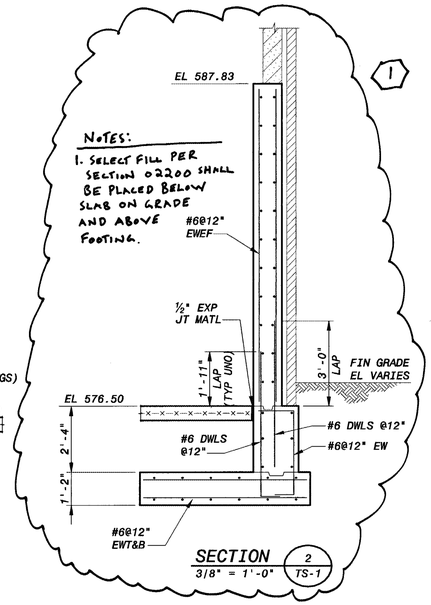

SECTION 2 (TS-1)
3/8" = 1'-0"

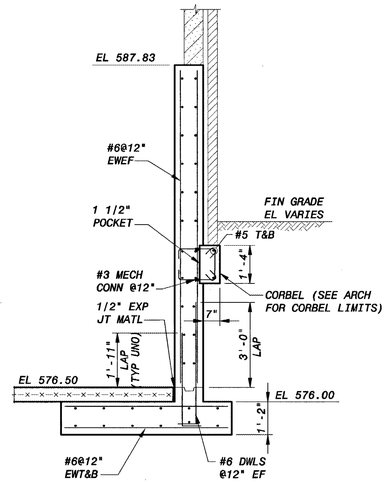

SECTION 3 (TS-1)
3/8" = 1'-0"

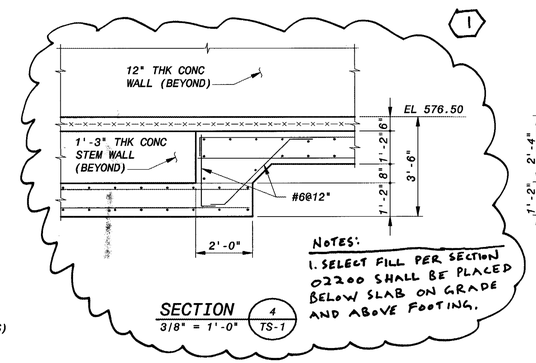

SECTION 4 (TS-1)
3/8" = 1'-0"

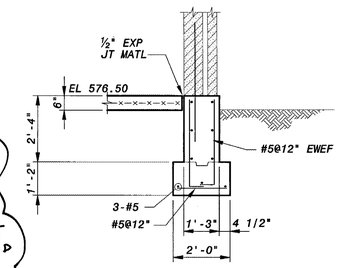

SECTION 5 (TS-1)
3/8" = 1'-0"

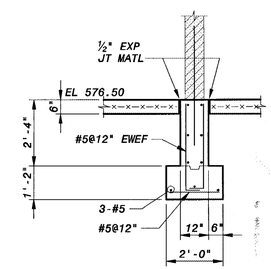

SECTION 6 (TS-1)
3/8" = 1'-0"

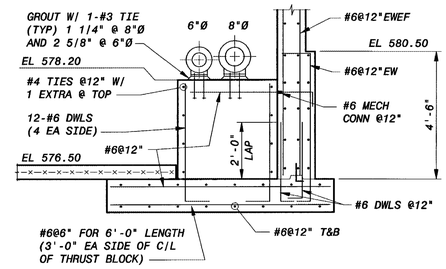

SECTION 7 (TS-1)
3/8" = 1'-0"

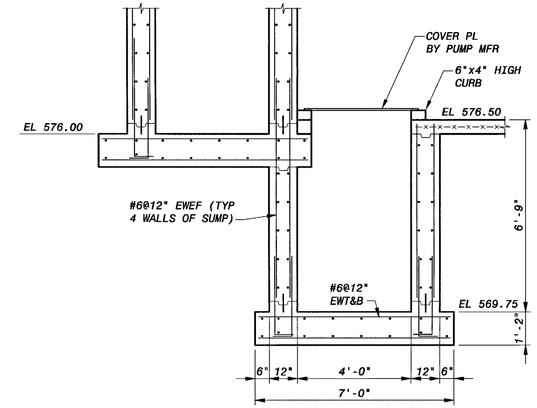

SECTION 8 (TS-1)
3/8" = 1'-0"

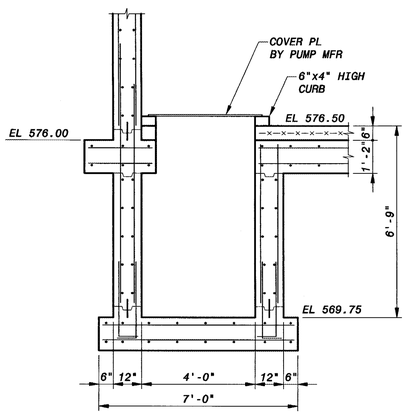

SECTION 9 (TS-1)
3/8" = 1'-0"

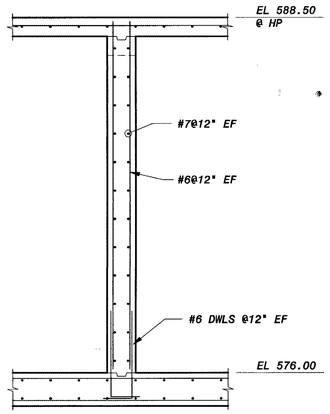

SECTION 10 (TS-1)
3/8" = 1'-0"

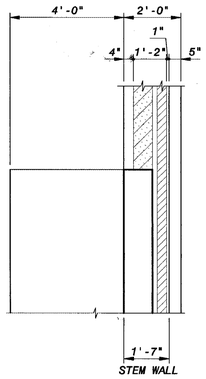

DETAIL A
3/8" = 1'-0"

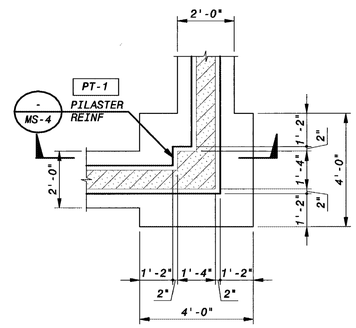

PLAN

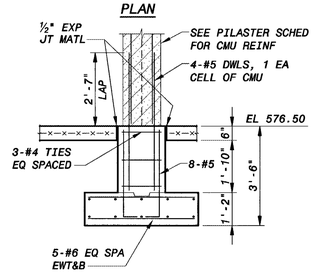

SECTION

DETAIL B
3/8" = 1'-0"

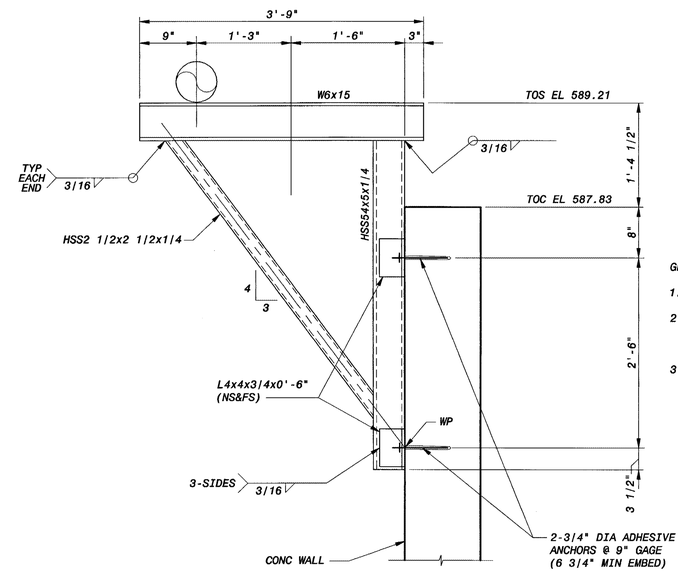

PIPE SUPPORT C
1" = 1'-0"

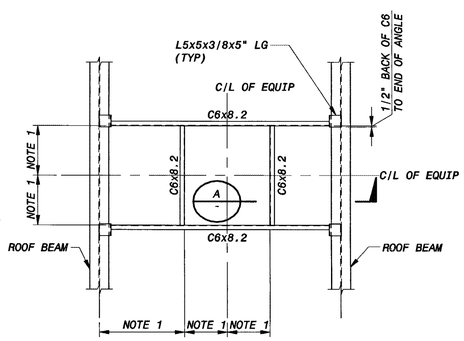

DETAIL C
(NTS)
TS-2

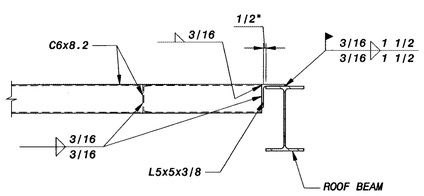

SECTION A
(NTS)

NOTES:

1. DIMENSION TO BE COORDINATED WITH MECH EQUIP SUPPLIER.
2. ROOF DECK NOT SHOWN FOR CLARITY.

GENERAL FOUNDATION NOTES:

1. ALL FOOTINGS SHALL BEAR ON LIMESTONE AND SHALE ROCK.
2. IF SHALE ROCK IS EXPOSED DURING FOOTING EXCAVATION, A 2 INCH MUD MAT SHALL BE USED TO COVER THE SHALE ROCK AND PROTECT IT FROM WEATHERING DURING CONSTRUCTION.
3. IF UNSUITABLE BEARING ROCK IS ENCOUNTERED IN FOOTING EXCAVATIONS, THE EXCAVATIONS SHALL BE EXTENDED DEEPER TO SUITABLE ROCK. THE OVER EXCAVATION SHALL BE BACKFILLED WITH CLSM AS PER SECTION 02200.

LOWER BIRD CREEK WWTP EXPANSION
TMUA PROJECT NO. ES 2006-01
CONTRACT 1B

SLUDGE TRANSFER PUMP STATION
STRUCTURAL
FOUNDATION SECTIONS AND DETAILS

CITY OF TULSA, OKLAHOMA
TULSA METROPOLITAN UTILITY AUTHORITY
ENGINEERING SERVICES DEPARTMENT

PLANS AND ESTIMATES PREPARED BY:

BLACK & VEATCH Building a world of difference. Black & Veatch Corporation Kansas City, Missouri
Holloway, Updike and Bollen Consulting Engineers Muskogee · Broken Arrow
DWGATES Engineering Services

REVISION	BY	DATE
Addendum No. 1	PSB	1-6-12

REGISTERED PROFESSIONAL ENGINEER DENNIS LYNN WOOD 13651 OKLAHOMA 9/23/11

PLAN SCALE:	DRAWN	RR	
	DESIGNED	DLW	
	SURVEY		
PROFILE SCALE:	FIELD MGR.	TCB	10/11
HORIZONTAL: 1" =	SECT. MGR.		
	PROJ. MGR.		10/3/11
VERTICAL 1" =	RECOMMENDED: HAS 10/31/11		

APPROVED:
DIRECTOR

FILE: TA-02 DRAWING: TS-3 DATE 10/28/2011
ATLAS PAGE NO: SHEET 198 OF 261 SHEETS

PLOTTED DATE: GHA53300, 6/10/2011 11:27:38 AM
SAVED DATE: MCKC62672, 9/21/2011 10:08:06 AM
CYONET ID: 145120-30000-S-B0200.DWG

FD145120
D145120S1

9-28-11
B&V PROJECT NO. 145120

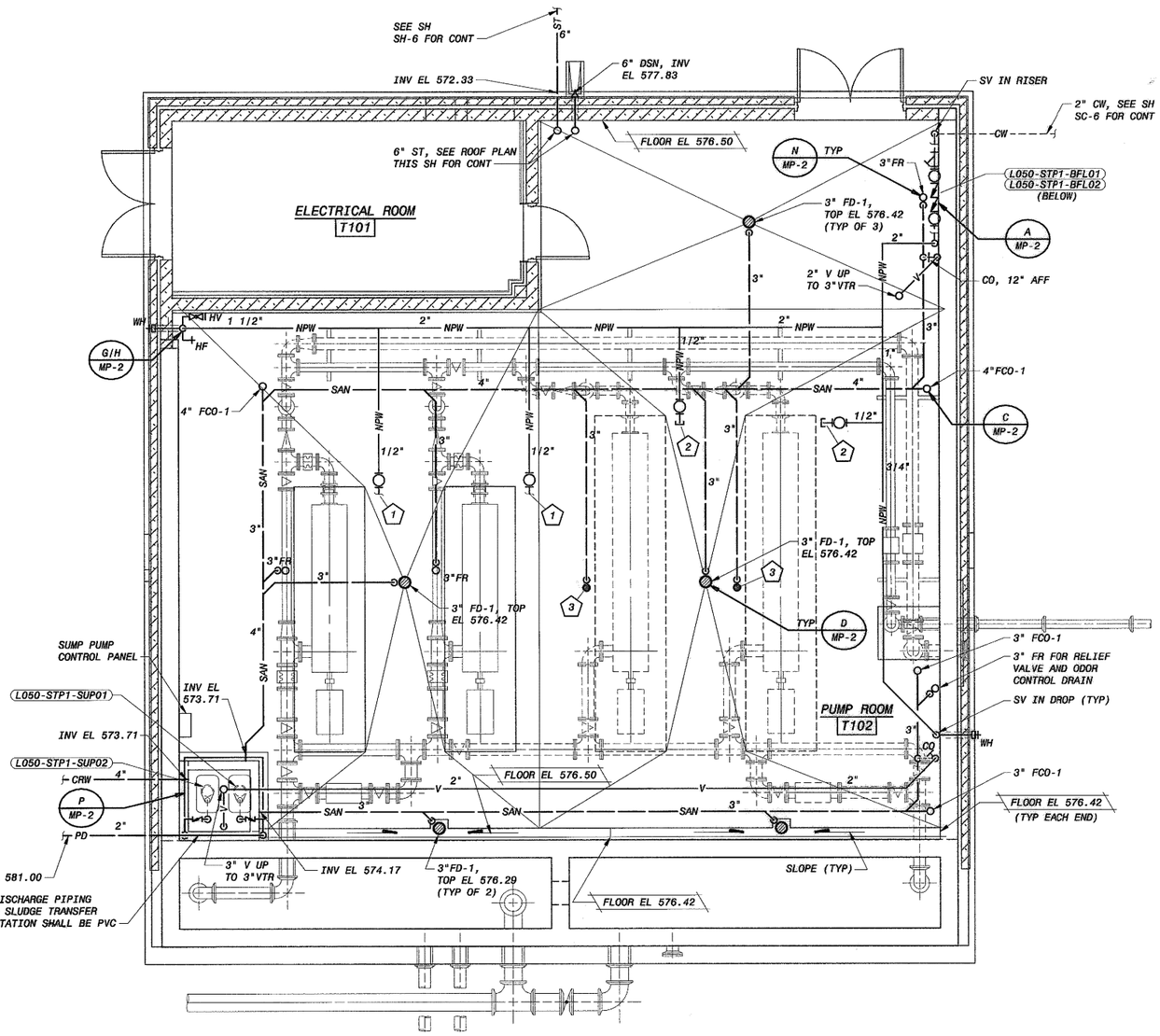

OPERATING FLOOR PLAN

1/4" = 1'-0"

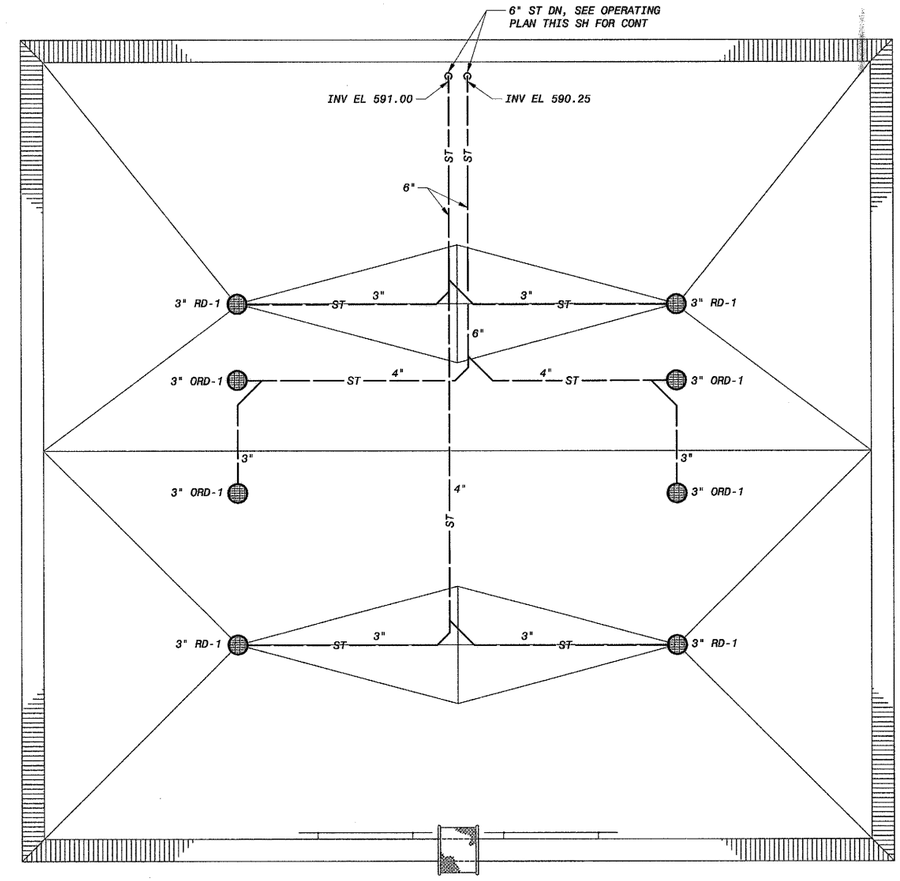

ROOF PLAN

1/4" = 1'-0"

GENERAL NOTE:

ALL WATER PIPING OVERHEAD TO BE ROUTED ABOVE MONORAL SUPPORTS.

PLAN NOTES:

1. 1/2" NPW TO PUMP SEAL WATER STATION, SEE SPEC SECTION 15499 AND SH GI-11 FOR CONT FOR CONT
2. 1/2" NPW CAPPED FOR FUTURE PUMP SEAL WATER STATION
3. 3" BU FLUSH WITH FLOOR AND PLUGGED FOR FUTURE

REGISTERED PROFESSIONAL ENGINEER
DAVID WILLIAM CONDELSON
17980
OKLAHOMA

REVISION	BY	DATE

LOWER BIRD CREEK WWTP EXPANSION
TMUA PROJECT NO. ES 2006-01
CONTRACT 1B

SLUDGE TRANSFER PUMP STATION
PLUMBING
OPERATING FLOOR PLAN

CITY OF TULSA, OKLAHOMA
TULSA METROPOLITAN UTILITY AUTHORITY
ENGINEERING SERVICES DEPARTMENT

PLANS AND ESTIMATES PREPARED BY:

BLACK & VEATCH Building a world of difference. Black & Veatch Corporation Kansas City, Missouri

Holloway, Updike and Bellen Consulting Engineers Muskogee · Broken Arrow

OWGATES Engineering Services

PLAN SCALE: 1/4" = 1'-0"	DRAWN	AEC	APPROVED:
	DESIGNED	AEC	
	SURVEY		
PROFILE SCALE:	FIELD MGR.	TOS 10/11	
HORIZONTAL: 1" =	SECT. MGR.		
	PROJ. MGR.	RGV 10/13/11	
VERTICAL 1" =	RECOMMENDED: HAS 10/20/11		DIRECTOR
FILE: TP-01.DWG	DRAWING: TP-1		DATE 10/28/2011
ATLAS PAGE NO:			SHEET 199 OF 261 SHEETS

JBB 9-28-11

B&V PROJECT NO. 145120

PLOTTED DATE: 9/22/2011 5:53:06 AM, Batch Plot
SAVED DATE: LOV16744, 9/20/2011 10:34:25 AM
CYGNET ID: 145120-3000-PB-B0020W41B

FD145120
D145120SV

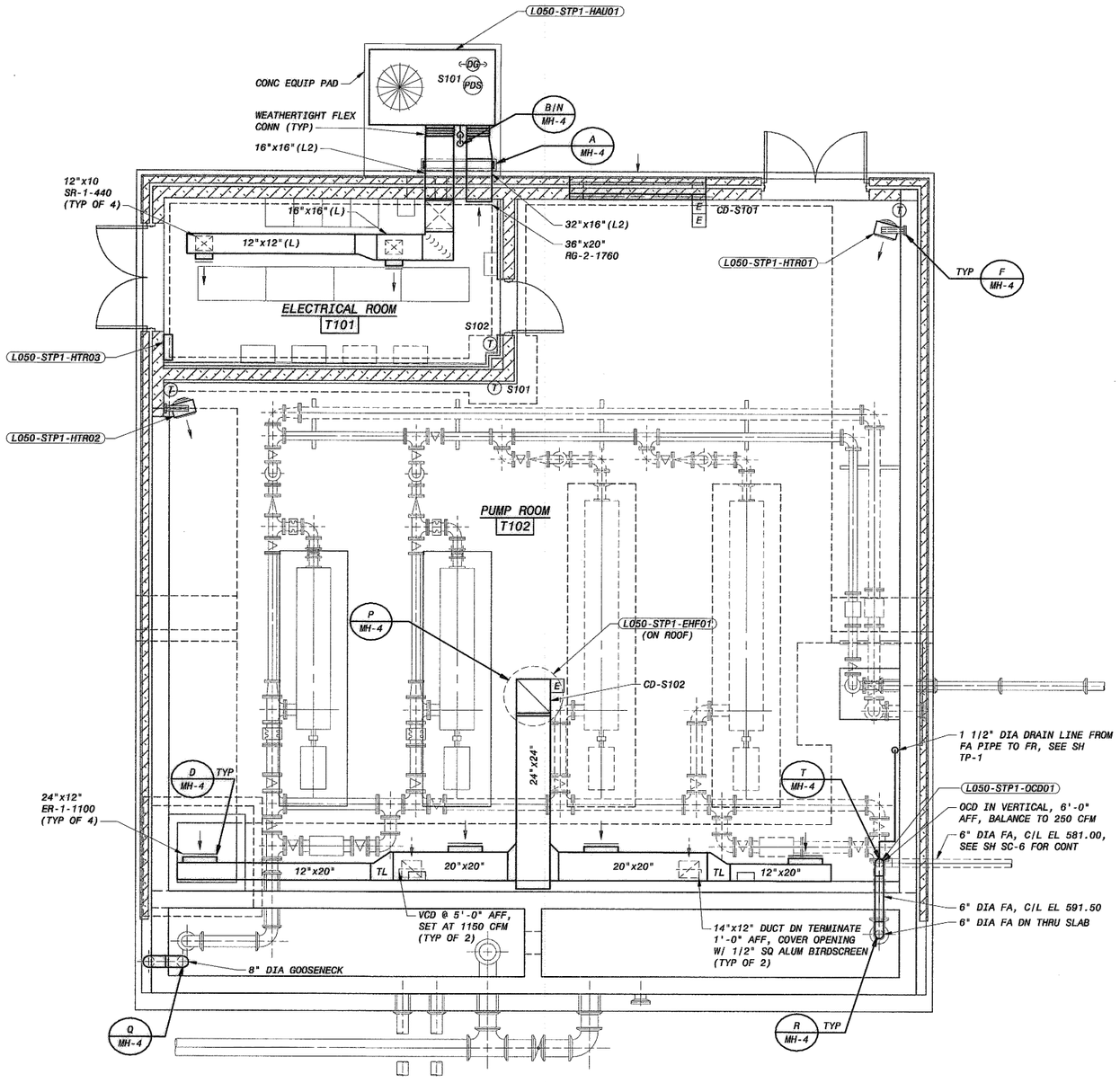

OPERATING FLOOR PLAN

1/4" = 1'-0"

LOWER BIRD CREEK WWTP EXPANSION
TMUA PROJECT NO. ES 2006-01
CONTRACT 1B

SLUDGE TRANSFER PUMP STATION
HVAC
OPERATING FLOOR PLAN

CITY OF TULSA, OKLAHOMA
TULSA METROPOLITAN UTILITY AUTHORITY
ENGINEERING SERVICES DEPARTMENT

PLANS AND ESTIMATES PREPARED BY:

BLACK & VEATCH Building a world of difference. Black & Veatch Corporation Kansas City, Missouri

Holloway, Updike and Bellon Consulting Engineers Muskogee · Broken Arrow

DWGATES Engineering Services

REGISTERED PROFESSIONAL ENGINEER DAVID WILLIAM NELSON 17980 OKLAHOMA 9/22/11

REVISION	BY	DATE

PLAN SCALE: 1/4" = 1'-0"	DRAWN	AEC	APPROVED:
	DESIGNED	AEC	
	SURVEY		
PROFILE SCALE:	FIELD MGR.	TDS 10/11	
HORIZONTAL: 1" =	SECT. MGR.		
	PROJ. MGR.	EBV 10/31/11	
VERTICAL 1" =	RECOMMENDED: HAB 10/31/11		DIRECTOR
FILE: TH-01.DWG	DRAWING: TH-1		DATE 10/28/2011
ATLAS PAGE NO:			SHEET 200 OF 261 SHEETS

Job 9-28-11

B&V PROJECT NO. 145120

PLOTTED DATE: 9/22/2011 5:52:05 AM, Batch Plot
SAVED DATE: LOV16744, 9/20/2011 9:02:16 AM
CABINET ID: 145120-3000-H-B0020M4S

FD145120
D145120BV

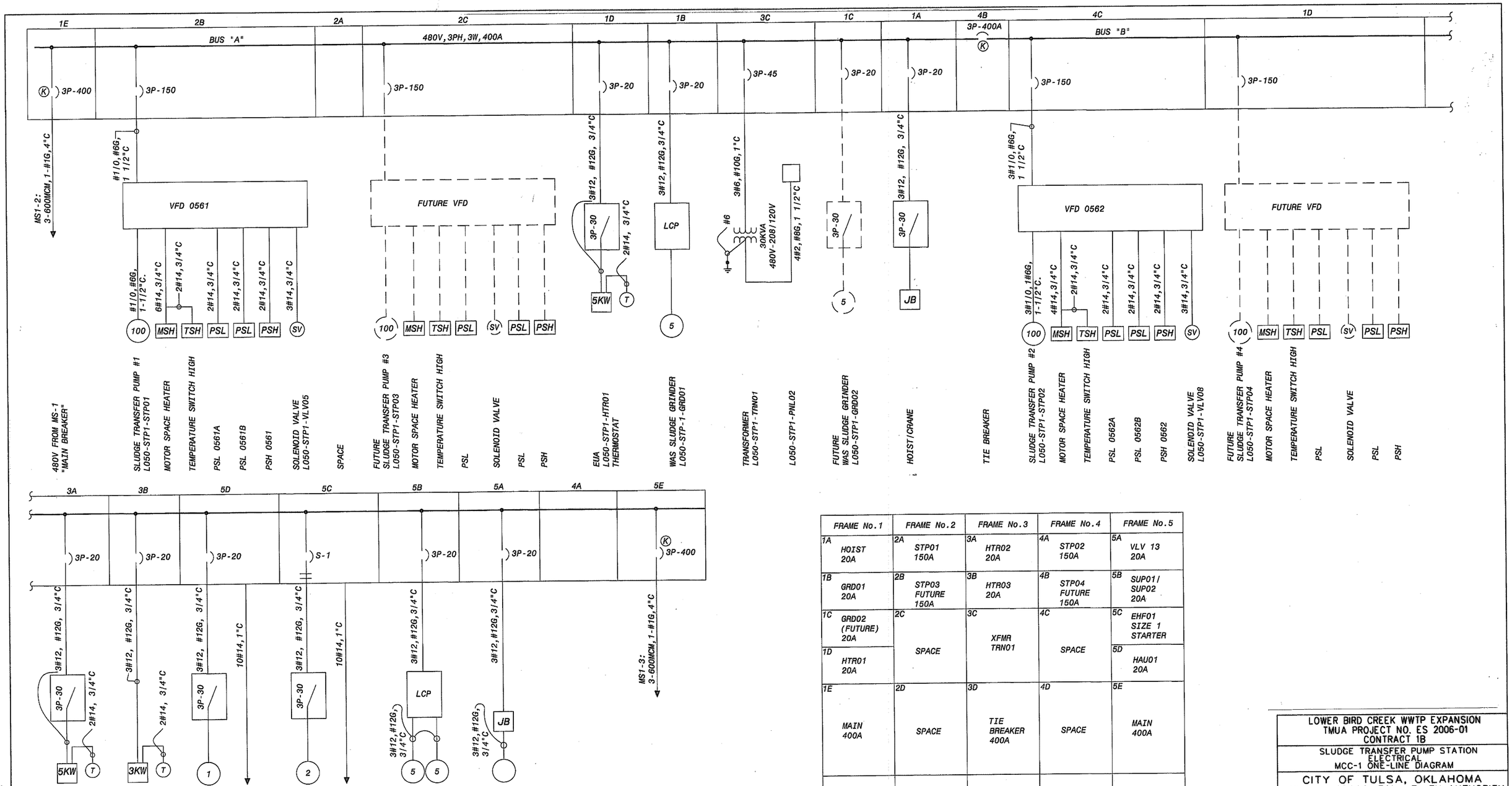

FRAME No.1	FRAME No.2	FRAME No.3	FRAME No.4	FRAME No.5
1A HOIST 20A	2A STP01 150A	3A HTR02 20A	4A STP02 150A	5A VLV 13 20A
1B GRD01 20A	2B STP03 FUTURE 150A	3B HTR03 20A	4B STP04 FUTURE 150A	5B SUP01/ SUP02 20A
1C GRD02 (FUTURE) 20A	2C SPACE	3C XFMR TRN01	4C SPACE	5C EHF01 SIZE 1 STARTER
1D HTR01 20A				5D HAU01 20A
1E MAIN 400A	2D SPACE	3D TIE BREAKER 400A	4D SPACE	5E MAIN 400A

ELEVATION VIEW - MCC-1

SCALE: NONE

MCC-1 ONE-LINE DIAGRAM

SCALE: NONE

LOWER BIRD CREEK WWTP EXPANSION
TMUA PROJECT NO. ES 2006-01
CONTRACT 1B

SLUDGE TRANSFER PUMP STATION
ELECTRICAL
MCC-1 ONE-LINE DIAGRAM

CITY OF TULSA, OKLAHOMA
TULSA METROPOLITAN UTILITY AUTHORITY
ENGINEERING SERVICES DEPARTMENT

PLANS AND ESTIMATES PREPARED BY:

BLACK & VEATCH Building a world of difference
Black & Veatch Corporation Kansas City, Missouri
Holloway, Updike and Bellen Consulting Engineers Muskogee • Broken Arrow
DWGATES Engineering Services

REVISION	BY	DATE

DERRIK WAYNE GATES OKLAHOMA
9-23-11

PLAN SCALE:	DRAWN	FLT	APPROVED:
	DESIGNED	DWG	
	SURVEY		
PROFILE SCALE:	FIELD MGR.	TOB 10/11	
HORIZONTAL: 1" =	SECT. MGR.		
	PROJ. MGR.	BGV 10/31/11	
VERTICAL 1" =	RECOMMENDED: HAS 10/30/11		DIRECTOR
FILE: TE01	DRAWING: TE-1		DATE 10/28/2011
ATLAS PAGE NO:			SHEET 201 OF 261 SHEETS

9-28-11

B&V PROJECT NO. 145120

PLOTTED DATE: 9/21/2011 5:39:20 PM
SAVED DATE: FEC08341
CYDGET ID: 145120-3000-C-B000067 26

FD145120
D145120DWG

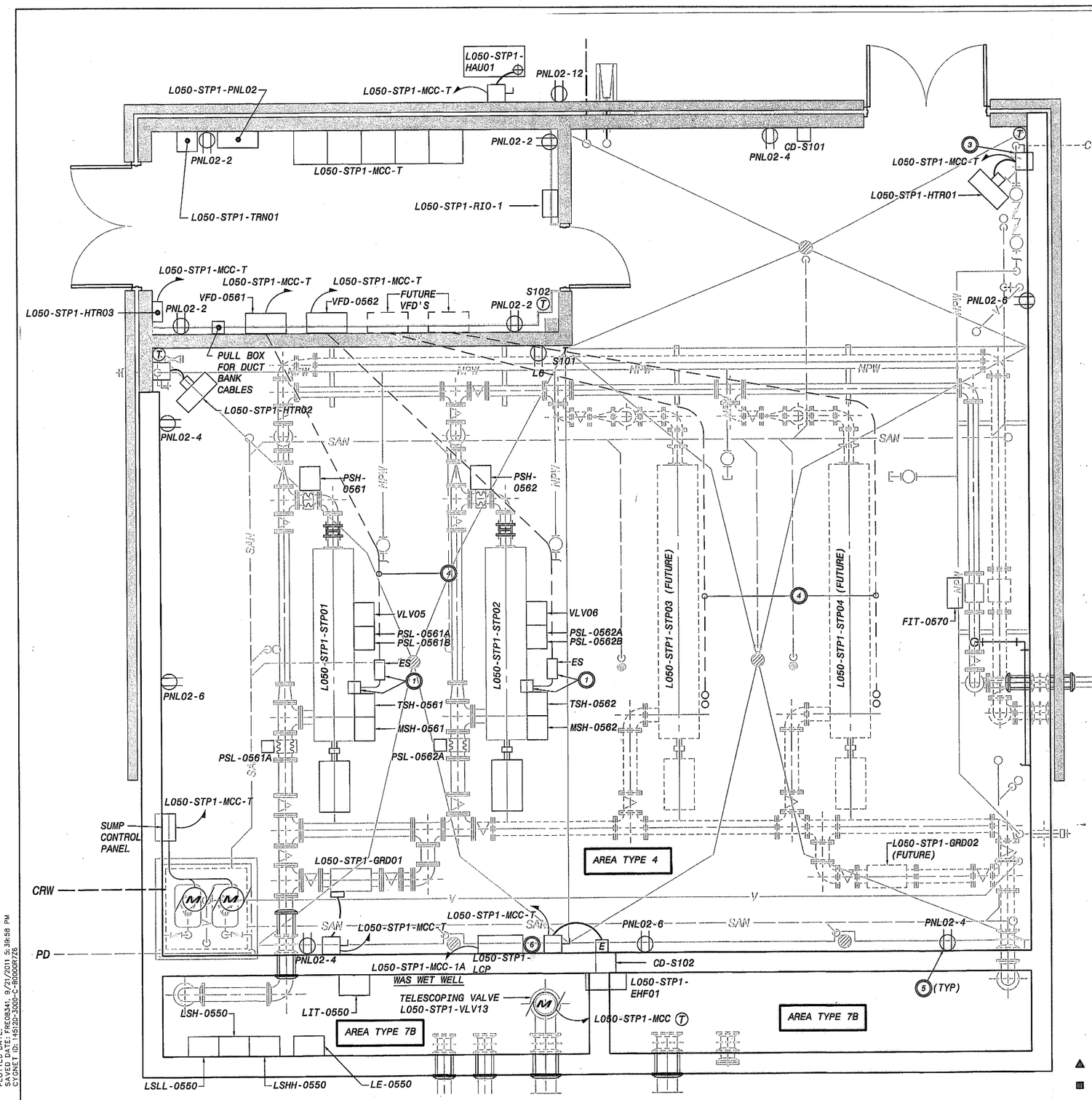

POWER PLAN

SCALE: 3/8"=1'-0"

NOTES:

1. EMERGENCY STOP STATION. INSTALL IN NEMA 4 ENCLOSURE. VERIFY EXACT PLACEMENT IN FIELD WITH OWNER.
2. REFER TO ONE-LINE DIAGRAM FOR ELECTRICAL EQUIPMENT CIRCUITS.
3. INSTALL A 30A, 480V, 3 POLE DISCONNECT IN NEMA 3R ENCLOSURE FOR EUH'S. (TYPICAL OF 2)
4. INSTALL DUPLICATE SET OF CONDUITS FOR SPARE. REFER TO ONE-LINE DIAGRAM.
5. ALL RECEPTACLES TO BE WEATHER PROOF.
6. GRINDER LOCAL CONTROL PANEL. CONNECT TO MCC. SEE SPECIFICATIONS AND PLC ONE-LINE DIAGRAM FOR ADDITIONAL INFORMATION.

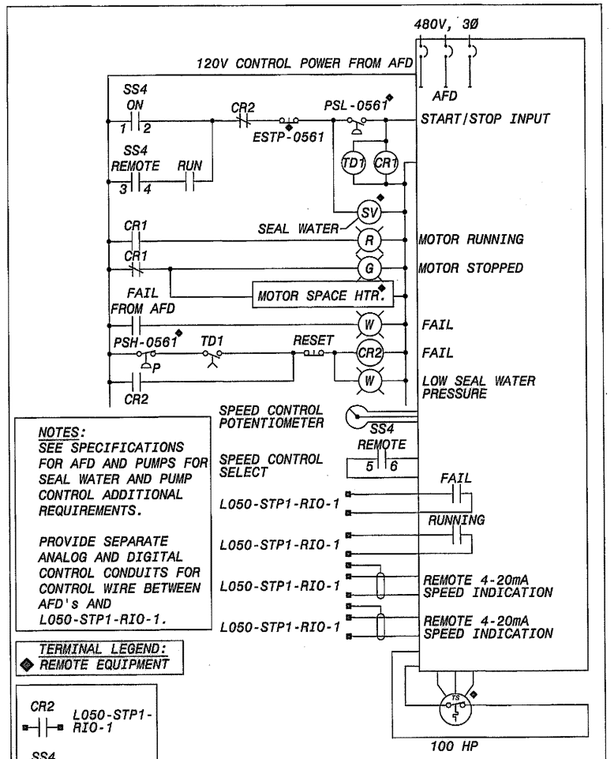

NOTES:
SEE SPECIFICATIONS FOR AFD AND PUMPS FOR SEAL WATER AND PUMP CONTROL ADDITIONAL REQUIREMENTS.

PROVIDE SEPARATE ANALOG AND DIGITAL CONTROL CONDUITS FOR CONTROL WIRE BETWEEN AFD's AND L050-STP1-RIO-1.

TERMINAL LEGEND:
◆ REMOTE EQUIPMENT

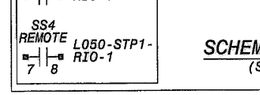

SCHEMATIC - L050-STP1-STP01

(SIMILAR FOR L050-STP1-STP02)

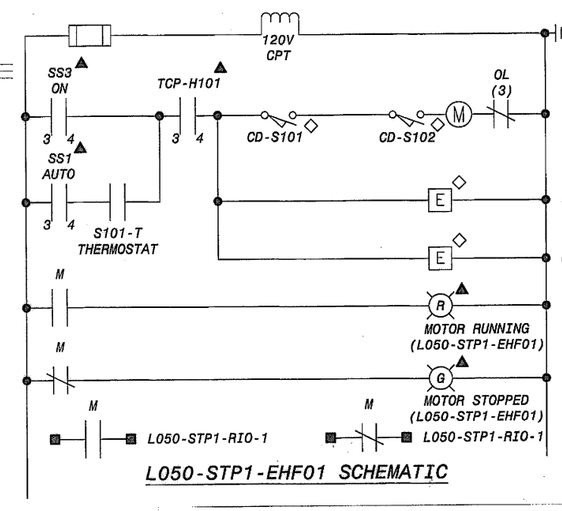

L050-STP1-EHF01 SCHEMATIC

TERMINAL LEGEND:

- ▲ IN MOTOR STARTER
- ■ IN RIO CABINET
- ◇ AT REMOTE DEVICE

LOWER BIRD CREEK WWTP EXPANSION
TMUA PROJECT NO. ES 2006-01
CONTRACT 1B

SLUDGE TRANSFER PUMP STATION
ELECTRICAL
POWER PLAN

CITY OF TULSA, OKLAHOMA
TULSA METROPOLITAN UTILITY AUTHORITY
ENGINEERING SERVICES DEPARTMENT

PLANS AND ESTIMATES PREPARED BY:
BLACK & VEATCH Building a world of difference
Black & Veatch Corporation Kansas City, Missouri
Holloway, Updike and Dollen Consulting Engineers Muskogee • Broken Arrow
OWGATES Engineering Services

DEREK WAYNE GATES OKLAHOMA 9-23-11

REVISION	BY	DATE

PLAN SCALE:	DRAWN	FLT	
	DESIGNED	DWG	
	SURVEY		
PROFILE SCALE:	FIELD MGR.	TDS	10/11
	SECT. MGR.		
HORIZONTAL: 1" =	PROJ. MGR.	RBV	10/5/11
VERTICAL 1" =	RECOMMENDED:	HAS	10/20/11
FILE: TE02	DRAWING: TE-2		
ATLAS PAGE NO:			

APPROVED:
DIRECTOR
DATE 10/28/2011
SHEET 202 OF 261 SHEETS

9-23-11

B&V PROJECT NO. 145120

PLOTTED DATE:
SAVED DATE: FRE08341, 9/21/2011 5:39:58 PM
CYGNET ID: 145120-3000-C-B0000R726

FD145120
D145120DWG