CONFORMED TO BID MAY 4, 2012

CONSTRUCTION PLANS FOR
LOWER BIRD CREEK WWTP EXPANSION

TMUA PROJECT NO. ES 2006-01, CONTRACT 1B

ACCOUNT NOS. 6032-5455601-040522092016 AND 6009-5455601-040522062140

ENGINEERING SERVICES DEPARTMENT
CITY OF TULSA, OKLAHOMA

OWRB LOAN NO. ORF-11-0005

PLANS PREPARED BY:

BLACK & VEATCH CORPORATION
8400 WARD PARKWAY
KANSAS CITY, MO 64114
(913) 458 - 2000

HOLLOWAY, UPDIKE AND BELLEN, INC.
905 S. 9TH ST
BROKEN ARROW, OK 74012
(918) 251 - 0717

D.W. GATES ENGINEERING SERVICES
616 S. MAIN, SUITE 112
TULSA, OK 74119
(918) 583 - 6905

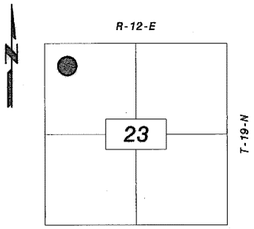

LOWER BIRD CREEK WWTP LOCATION MAP

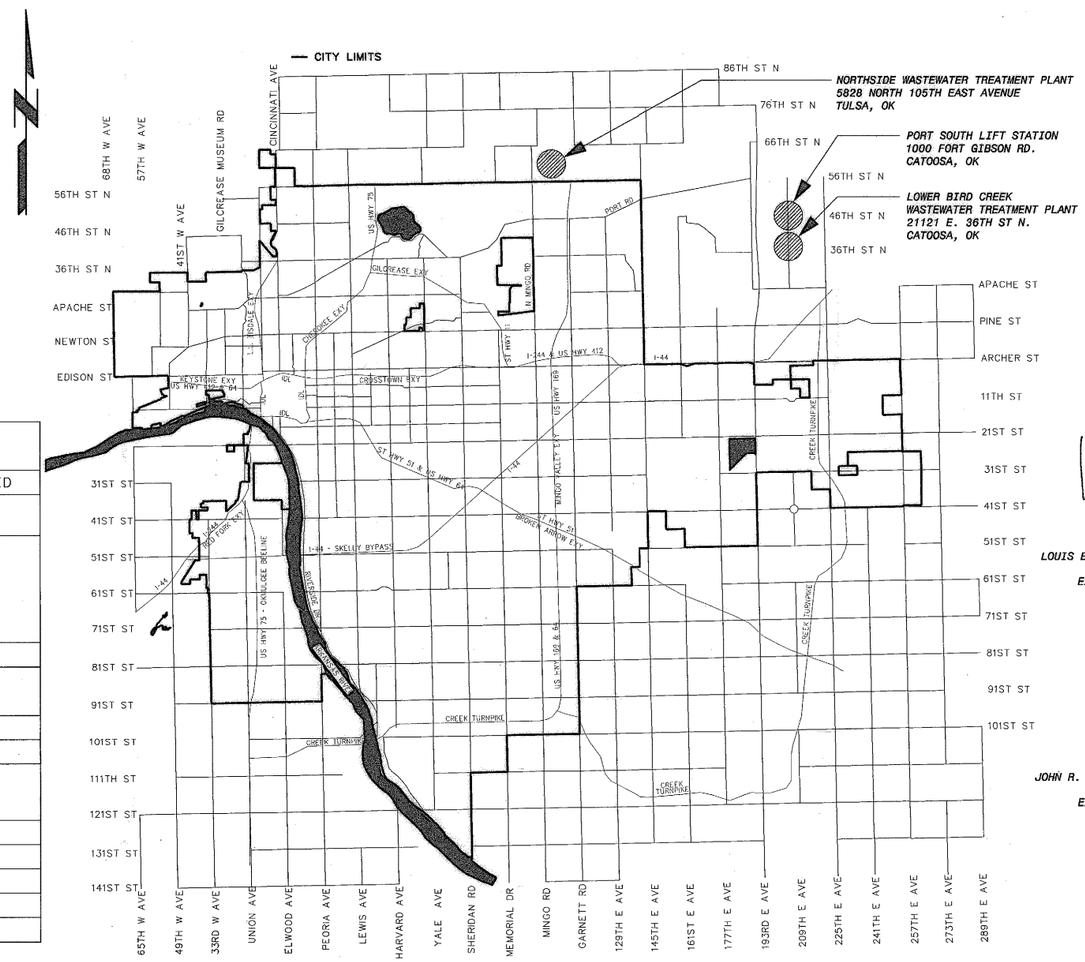

UTILITY COORDINATION BOX		
NAME	NUMBER	NOTIFIED
OKLAHOMA DEPARTMENT OF ENVIRONMENTAL QUALITY (ODEQ)	405-702-8122	
ENGINEERING WATER DESIGN WASTEWATER DESIGN TRANSPORTATION DESIGN TRAFFIC ENGINEERING DESIGN STORMWATER DESIGN	 918-596-9566 918-596-9564 918 596-9636 918-596-9741 918-596-9498	
OKLAHOMA NATURAL GAS CO.	918-831-8261	
AMERICAN ELECTRIC POWER / PUBLIC SERVICE COMPANY OF OKLAHOMA (AEP/PSO)	918-599-2844	
TULSA PERMIT CENTER	918-596-1865	
TULSA METROPOLITAN UTILITY AUTHORITY	918-596-9593	
CITY OF TULSA WATER SOLID WASTE DISPOSAL	 918-596-9566 918-596-9451	
AT&T	918-596-4283	
GENERAL TELEPHONE	918-451-3441	
COX COMMUNICATION	918-669-4866	
LOWER BIRD CREEK WWTP	918-596-9583	
NORTHSIDE WWTP	918-591-4555	

BLACK & VEATCH CORPORATION
CERTIFICATE OF AUTHORIZATION NO. 3314
EXPIRATION DATE: JUNE 30, 2012

HOLLOWAY, UPDIKE, AND BELLEN, INC.
CERTIFICATE OF AUTHORIZATION NO. 219
EXPIRATION DATE: JUNE 30, 2013

D.W. GATES ENGINEERING SERVICES
CERTIFICATE OF AUTHORIZATION NO. 2672
EXPIRATION DATE: JUNE 30, 2012

WITH REGARD TO THIS PROJECT, BLACK & VEATCH AND THE PROFESSIONALS WHOSE PERSONAL SEALS AND SIGNATURES APPEAR BELOW ASSUME RESPONSIBILTY ONLY FOR THE DRAWINGS, SPECIFICATIONS, AND OTHER DOCUMENTS BEARING THE PERSONAL SEALS OF THE UNDERSIGNED PROFESSIONALS, AND DISCLAIM ANY RESPONSIBILITY FOR ALL OTHER DRAWINGS, SPECIFICATIONS, ESTIMATES, REPORTS, OR OTHER DOCUMENTS WHICH DO NOT CONTAIN THE PERSONAL SEALS OF THE UNDERSIGNED PROFESSIONALS.

KURT A. RONNEKAMP, PROFESSIONAL ENGINEER
LICENSE NO: PE17439
EXPIRATION DATE: 12/31/2012

DENNIS L. WOOD, PROFESSIONAL ENGINEER
LICENSE NO: PE13651
EXPIRATION DATE: 5/31/2013

LOUIS E. NEMETH, REGISTERED ARCHITECT
LICENSE NO: A5784
EXPIRATION DATE: 6/30/2013

TIM A. HOLMES, PROFESSIONAL ENGINEER
LICENSE NO: PE20954
EXPIRATION DATE: 4/30/2012

DAVID W. NELSON, PROFESSIONAL ENGINEER
LICENSE NO: PE17980
EXPIRATION DATE: 10/31/2012

JOHN R. HENDRICK, PROFESSIONAL ENGINEER
LICENSE NO: PE15274
EXPIRATION DATE: 3/31/2012

STEPHEN TOLAR, PROFESSIONAL ENGINEER
(HOLLOWAY, UPDIKE, AND BELLEN, INC.)
LICENSE NO: PE20679
EXPIRATION DATE: 3/31/2013

DEREK W. GATES, PROFESSIONAL ENGINEER
(D.W. GATES ENGINEERING)
LICENSE NO: PE16502
EXPIRATION DATE: 2/28/2012

APPROVED BY
DIRECTOR
10/28/2011

ES 2006-01 CONTRACT 1B LBC WWTP EXPANSION

CYGNET IDENTIFIER: 145120-3000-C-B0000S659

GC-1

SHEET NO.	DRAWING NO.	DESCRIPTION
		GENERAL
1	GC-1	COVER SHEET
2	GC-2	CIVIL – DRAWING LIST
3	GC-3	CIVIL – GENERAL NOTES
4	GC-3A	CIVIL – PAY QUANTITIES
5	GC-4	CIVIL - ABBREVIATIONS
6	GC-5	CIVIL – LEGENDS
7	GC-6	CIVIL – PROCESS DESIGN PARAMETERS
8	GC-7	CIVIL - PROCESS SCHEMATIC
9	GC-8	CIVIL – HYDRAULIC PROFILE
10	GC-9	CIVIL / ARCHITECTURAL – CODE CLASSIFICATION TABLE
11	GC-10	CIVIL - PROJECT LOCATION MAP
12	GP-1	PLUMBING/HVAC – LEGEND, ABBREVIATIONS AND GENERAL NOTES
13	GE-1	ELECTRICAL – LEGEND AND ABBREVIATIONS
14	GE-2	ELECTRICAL - POWER DISTRIBUTION ONE-LINE DIAGRAMS
15	GE-3	ELECTRICAL – PLC01 & MISCELLANEOUS ONE-LINE DIAGRAMS
16	GE-4	ELECTRICAL - EXISTING OPERATIONS PLC ONE-LINE
17	GE-5	ELECTRICAL - SCHEMATICS
18	GE-6	ELECTRICAL - SCHEMATICS
19	GI-1	P&ID – LEGEND AND ABBREVIATIONS - SHEET 1 OF 3
20	GI-2	P&ID – LEGEND AND ABBREVIATIONS - SHEET 2 OF 3
21	GI-3	P&ID - LEGEND AND ABBREVIATIONS - SHEET 3 OF 3
22	GI-4	P&ID - PORT SOUTH LIFT STATION
23	GI-5	P&ID – HEADWORKS BUILDING INFLUENT SCREENING
24	GI-6	P&ID – HEADWORKS BUILDING GRIT BASINS
25	GI-7	P&ID – HEADWORKS BUILDING GRIT PUMPS AND ESCALATOR
26	GI-8	P&ID – EXISTING OXIDATION DITCH
27	GI-9	P&ID – FINAL CLARIFIER NO. 1
28	GI-10	P&ID – RETURN SLUDGE PUMP STATION AND RAS PUMPS
29	GI-11	P&ID – SLUDGE TRANSFER PUMP STATION
30	GI-12	P&ID – CHLORINE CONTACT BASIN AND EFFLUENT CONVEYANCE
31	GI-13	P&ID - SODIUM HYPOCHLORITE STORAGE
32	GI-14	P&ID - SODIUM HYPOCHLORITE TO CHLORINE CONTACT BASIN
33	GI-15	P&ID - SODIUM HYPOCHLORITE TO RAS AND PEW
34	GI-16	P&ID - SODIUM HYPOCHLORITE TO PORT SOUTH PUMP STATION
35	GI-17	P&ID - POLYMER SYSTEM FOR NORTHSIDE DAF
36	GI-18	P&ID – ODOR CONTROL
37	GI-19	P&ID – PLANT EFFLUENT WATER
38	GI-20	P&ID – CONTROL SYSTEM BLOCK DIAGRAM
		SITEWORK
39	SC-1	CIVIL - LEGEND AND GENERAL NOTES
40	SC-2	CIVIL - OVERALL SITE PLAN - LBC WWTP
41	SC-3	CIVIL - OVERALL SITE PLAN - PORT SOUTH
42	SC-4	CIVIL - STORMWATER MANAGEMENT PLAN
43	SC-5	CIVIL - STORMWATER MANAGEMENT PLAN DETAIL
44	SC-6	CIVIL – PARTIAL PIPING PLAN
45	SC-7	CIVIL – PARTIAL PIPING PLAN
46	SC-8	CIVIL – PARTIAL PIPING PLAN
47	SC-9	CIVIL - PARTIAL PIPING PLAN
48	SC-10	CIVIL – PARTIAL GRADING AND PAVING PLAN
49	SC-11	CIVIL – PARTIAL GRADING AND PAVING PLAN
50	SC-12	CIVIL – PARTIAL GRADING AND PAVING PLAN
51	SC-13	CIVIL – PARTIAL GRADING AND PAVING PLAN
52	SC-14	CIVIL - ACCESS DRIVE PLAN AND PROFILE
53	SC-15	CIVIL - ACCESS DRIVE PLAN AND PROFILE
54	SC-16	CIVIL - ACCESS DRIVE PLAN AND PROFILE
55	SC-17	CIVIL - ACCESS DRIVE PLAN AND PROFILE
56	SC-18	CIVIL - ACCESS DRIVE PLAN AND PROFILE
57	SC-19	CIVIL - ACCESS DRIVE PLAN AND PROFILE
58	SC-20	CIVIL - ACCESS DRIVE PLAN AND PROFILE
59	SC-21	CIVIL- HEADWORKS AND SLUDGE TRANSFER PUMP STATION SITE DETAIL PLAN
60	SC-22	CIVIL - OPERATIONS BUILDING SITE DETAIL PLAN
61	SC-23	CIVIL - BLASTING PLAN
62	SC-24	CIVIL- DRAINAGE STRUCTURE TABLE AND NOTES
63	SC-25	CIVIL/STRUCTURAL - EFFLUENT RISER STRUCTURE
64	SC-26	CIVIL/STRUCTURAL - EFFLUENT JUNCTION BOX
65	SC-27	CIVIL/STRUCTURAL - EXCESS FLOW VAULTS
66	SC-28	CIVIL/STRUCTURAL – MISCELLANEOUS YARD STRUCTURES
67	SC-29	CIVIL/STRUCTURAL – MISCELLANEOUS YARD STRUCTURES
68	SC-30	CIVIL - TYPICAL SECTIONS
69	SC-31	CIVIL - GRINDER PUMP STATION AND DETAILS
70	SC-32	CIVIL – MISCELLANEOUS DETAILS
71	SC-33	CIVIL – YARD PIPING PROFILES
72	SC-34	CIVIL – YARD PIPING PROFILES
73	SC-35	CIVIL – YARD PIPING PROFILES
74	SC-36	CIVIL – YARD PIPING PROFILES
75	SC-36A	CIVIL – YARD PIPING PROFILES
76	SC-37	CIVIL – PAVING CROSS-SECTIONS ACCESS DRIVE "A"
77	SC-38	CIVIL – PAVING CROSS-SECTIONS ACCESS DRIVE "A"
78	SC-39	CIVIL – PAVING CROSS-SECTIONS ACCESS DRIVE "A"
79	SC-40	CIVIL – PAVING CROSS-SECTIONS ACCESS DRIVE "A"
80	SC-41	CIVIL – PAVING CROSS-SECTIONS ACCESS DRIVE "A"
81	SC-42	CIVIL – PAVING CROSS-SECTIONS ACCESS DRIVE "A"
82	SC-43	CIVIL – PAVING CROSS-SECTIONS ACCESS DRIVE "A"
83	SC-44	CIVIL – PAVING CROSS-SECTIONS ACCESS DRIVE "A"
84	SC-45	CIVIL – PAVING CROSS-SECTIONS ACCESS DRIVE "B"
85	SC-46	CIVIL – PAVING CROSS-SECTIONS ACCESS DRIVES "B", "C", & "D"
86	SE-1	ELECTRICAL – SITE PLAN
87	SE-2	ELECTRICAL – SITE PLAN
88	SE-3	ELECTRICAL – SITE PLAN
89	SE-4	ELECTRICAL – SITE PLAN
90	SE-5	ELECTRICAL - SITE PLAN
91	SE-5A	ELECTRICAL - SITE PLAN
92	SE-6	ELECTRICAL – DUCT BANK SCHEDULE, SECTIONS AND SCHEDULE

SHEET NO.	DRAWING NO.	DESCRIPTION
		HEADWORKS BUILDING
93	HA-1	ARCHITECTURAL - SOUTH AND WEST ELEVATIONS
94	HA-2	ARCHITECTURAL - NORTH AND EAST ELEVATIONS
95	HA-3	ARCHITECTURAL - LOWER FLOOR PLAN
96	HA-4	ARCHITECTURAL - OPERATING FLOOR PLAN AND SECTIONS
97	HA-5	ARCHITECTURAL - ROOF PLAN
98	HA-6	ARCHITECTURAL - WALL SECTIONS
99	HA-7	ARCHITECTURAL - WALL SECTIONS
100	HA-8	ARCHITECTURAL - MISCELLANEOUS DETAILS
101	HC-1	CIVIL - LOWER FLOOR PLANS
102	HC-2	CIVIL - OPERATING FLOOR PLAN
103	HC-3	CIVIL - SECTIONS
104	HC-4	CIVIL - SECTIONS
105	HC-5	CIVIL - SECTIONS
106	HC-6	CIVIL - SECTIONS
107	HC-7	CIVIL - SECTIONS
108	HC-8	CIVIL - SLUICE TROUGH DETAILS
109	HS-1	STRUCTURAL - FOUNDATION PLAN
110	HS-2	STRUCTURAL - OPERATING FLOOR PLAN
111	HS-3	STRUCTURAL - MISCELLANEOUS PLANS
112	HS-4	STRUCTURAL - ROOF FRAMING PLAN
113	HS-5	STRUCTURAL - SECTIONS
114	HS-6	STRUCTURAL - SECTIONS
115	HS-7	STRUCTURAL - SECTIONS
116	HS-8	STRUCTURAL - SECTIONS AND DETAILS
117	HS-9	STRUCTURAL - SECTIONS
118	HS-10	STRUCTURAL - STAIR PLANS AND SECTIONS
119	HS-11	STRUCTURAL - ACCESS PLATFORM PLANS AND SECTIONS
120	HS-12	STRUCTURAL - ACCESS PLATFORM SECTIONS AND DETAILS
121	HS-13	STRUCTURAL - ODOR CONTROL PLAN
122	HS-14	STRUCTURAL - EQUIPMENT PAD SECTION
123	HP-1	PLUMBING – LOWER FLOOR PLAN
124	HP-2	PLUMBING – OPERATING FLOOR AND ROOF PLANS
125	HH-1	HVAC - LOWER FLOOR PLAN
126	HH-2	HVAC - OPERATING FLOOR PLAN
127	HE-1	ELECTRICAL – MCC-H ONE-LINE DIAGRAMS
128	HE-2	ELECTRICAL – MCC-H ONE-LINE DIAGRAMS
129	HE-3	ELECTRICAL – LOWER FLOOR POWER PLAN
130	HE-4	ELECTRICAL - OPERATING FLOOR POWER PLAN
131	HE-5	ELECTRICAL - LOWER FLOOR LIGHTING PLAN
132	HE-6	ELECTRICAL - OPERATING FLOOR LIGHTING PLAN
		OXIDATION DITCH AND LONGITUDINAL BASINS
133	DC-1	CIVIL/STRUCTURAL - DEMOLITION PLANS AND SECTIONS
134	DC-2	CIVIL/STRUCTURAL - PLANS
135	DC-3	CIVIL/STRUCTURAL - SECTIONS AND DETAILS
136	DC-4	CIVIL/STRUCTURAL - SECTIONS AND DETAILS
137	DC-5	CIVIL/STRUCTURAL - PLANS AND SECTIONS
138	DE-1	ELECTRICAL - POWER PLAN
		FINAL CLARIFIER NO. 1
139	EC-1	CIVIL/STRUCTURAL – PLAN
140	EC-2	CIVIL/STRUCTURAL – SECTIONS AND DETAILS
141	EC-3	CIVIL/STRUCTURAL – SECTIONS AND DETAILS
142	EC-4	CIVIL/STRUCTURAL – SECTIONS AND DETAILS
143	EC-5	CIVIL/STRUCTURAL – DETAILS
144	EE-1	ELECTRICAL – POWER PLAN
		MODIFIED CHLORINE CONTACT BASINS
145	FC-1	CIVIL/STRUCTURAL - DEMOLITION PLANS
146	FC-2	CIVIL/STRUCTURAL - DEMOLITION SECTIONS
147	FC-3	CIVIL/STRUCTURAL - FOUNDATION PLAN
148	FC-4	CIVIL/STRUCTURAL - UPPER LEVEL PLAN
149	FC-5	CIVIL/STRUCTURAL - SECTIONS AND DETAILS
150	FE-1	NOT USED
		CHEMICAL STORAGE AND FEED FACILITY
151	CC-1	CIVIL/STRUCTURAL - DEMOLITION PLANS
152	CC-2	CIVIL/STRUCTURAL - FOUNDATION PLAN
153	CC-3	CIVIL/STRUCTURAL - UPPER LEVEL PLAN
154	CC-4	CIVIL/STRUCTURAL - SECTIONS
155	CP-1	PLUMBING/HVAC - PLAN
156	CE-1	ELECTRICAL - UPPER LEVEL POWER AND LIGHTING PLAN
		RETURN SLUDGE PUMP STATION
157	BA-1	ARCHITECTURAL - ROOF PLAN AND DETAILS
158	BC-1	CIVIL/STRUCTURAL - DEMOLITION PLAN
159	BC-2	CIVIL/STRUCTURAL - DEMOLITION SECTIONS
160	BC-3	CIVIL/STRUCTURAL - PLAN
161	BC-4	CIVIL/STRUCTURAL - SECTIONS AND DETAILS
162	BH-1	PLUMBING/HVAC - FLOOR PLAN
163	BE-1	NOT USED
164	BE-2	ELECTRICAL - EXISTING MCC-OB1 ONE-LINE DIAGRAM
165	BE-3	ELECTRICAL - EXISTING MCC-OB2 ONE-LINE DIAGRAM
166	BE-4	ELECTRICAL - POWER PLAN

SHEET NO.	DRAWING NO.	DESCRIPTION
		OPERATIONS BUILDING
167	AA-1	ARCHITECTURAL - BUILDING ELEVATIONS
168	AA-2	ARCHITECTURAL - FLOOR PLAN
169	AA-3	ARCHITECTURAL - ROOF PLAN
170	AA-4	ARCHITECTURAL - REFLECTED CEILING PLAN AND DETAILS
171	AA-5	ARCHITECTURAL - ENLARGED RESTROOM AND LOCKER ROOM
172	AA-6	ARCHITECTURAL - WALL SECTIONS
173	AA-7	ARCHITECTURAL - WALL SECTIONS
174	AA-8	ARCHITECTURAL - ENLARGED LABORATORY PLAN, SECTIONS, AND ELEVATIONS
175	AA-9	ARCHITECTURAL - ENLARGED RECEPTION PLAN, SECTIONS, AND ROOF DETAILS
176	AA-10	ARCHITECTURAL - TORNADO SHELTER
177	AS-1	STRUCTURAL - FOUNDATION PLAN
178	AS-2	STRUCTURAL - ROOF FRAMING PLAN
179	AS-3	STRUCTURAL - SECTIONS AND DETAILS
180	AS-4	STRUCTURAL - SECTIONS, DETAILS AND ROOF TRUSS LOADS
181	AP-1	PLUMBING - FLOOR PLAN
182	AH-1	HVAC - FLOOR PLAN
183	AE-1	ELECTRICAL - RISER DIAGRAMS
184	AE-2	ELECTRICAL - POWER PLAN
185	AE-3	ELECTRICAL - LIGHTING PLAN
186	AE-4	ELECTRICAL - SCHEDULES
187	AE-5	ELECTRICAL - FIRE PROTECTION PLAN
188	AE-6	ELECTRICAL - LIGHTNING PROTECTION AND GROUNDING PLAN
189	AE-7	ELECTRICAL - ONE LINE DIAGRAMS
		SLUDGE TRANSFER PUMP STATION
190	TA-1	ARCHITECTURAL - BUILDING ELEVATIONS
191	TA-2	ARCHITECTURAL - FLOOR PLAN AND ROOF PLAN
192	TA-3	ARCHITECTURAL - WALL SECTIONS
193	TA-4	ARCHITECTURAL - MISCELLANEOUS DETAILS
194	TC-1	CIVIL - OPERATING FLOOR PLAN
195	TC-2	CIVIL - SECTIONS
196	TS-1	STRUCTURAL - FOUNDATION PLAN
197	TS-2	STRUCTURAL - ROOF PLAN
198	TS-3	STRUCTURAL - FOUNDATION SECTIONS AND DETAILS
199	TP-1	PLUMBING - OPERATING FLOOR PLAN
200	TH-1	HVAC - OPERATING FLOOR PLAN
201	TE-1	ELECTRICAL - MCC ONE-LINE DIAGRAM
202	TE-2	ELECTRICAL - POWER PLAN
203	TE-3	ELECTRICAL - LIGHTING PLAN
204	TE-4	ELECTRICAL - LIGHTNING PROTECTION PLAN
205	TE-5	ELECTRICAL - GROUNDING PLAN
206	TE-6	ELECTRICAL - PLC ONE-LINE DIAGRAM
207	TE-7	ELECTRICAL - PANEL SCHEDULES
		PORT SOUTH LIFT STATION
208	PC-1	CIVIL - DEMOLITION PLAN AND SECTIONS
209	PC-2	CIVIL - PLANS
210	PC-3	CIVIL - SECTIONS
211	PC-4	CIVIL - SECTIONS AND DETAILS
212	PH-1	HVAC - PLANS
213	PE-1	ELECTRICAL - ONE-LINE DIAGRAMS
214	PE-2	ELECTRICAL - POWER PLAN AND DETAILS
215	PE-3	ELECTRICAL - ELEVATIONS
216	PE-4	ELECTRICAL - CONTROL PANEL I/O SCHEDULE, LIFT STA CONTROL DIAGRAM
217	PE-4A	ELECTRICAL - ONE-LINE DIAGRAMS
		NORTHSIDE WWTP DAF POLYMER FEED FACILITY
218	NC-1	CIVIL - DEMOLITION UPPER LEVEL PLAN
219	NC-2	CIVIL - DEMOLITION LOWER LEVEL PLAN
220	NC-3	CIVIL - DEMOLITION SECTIONS AND DETAILS
221	NC-4	CIVIL - UPPER LEVEL PLAN
222	NC-5	CIVIL - LOWER LEVEL PLAN
223	NC-6	CIVIL - SECTIONS AND DETAILS
224	NE-1	ELECTRICAL - UPPER LEVEL POWER PLAN
225	NE-2	ELECTRICAL - LOWER LEVEL POWER PLAN
226	NE-3	ELECTRICAL - OVERALL PLAN
227	NE-4	ELECTRICAL - ONE LINE DIAGRAMS

SHEET NO.	DRAWING NO.	DESCRIPTION
		MISCELLANEOUS SCHEDULES AND STANDARD DETAILS
228	MA-1	ARCHITECTURAL – ROOM, DOOR, AND LOUVER SCHEDULES
229	MA-2	ARCHITECTURAL – WINDOW SCHEDULE, ELEVATIONS, AND DOOR DETAILS
230	MA-3	ARCHITECTURAL – DOOR DETAILS
231	MA-4	ARCHITECTURAL - WINDOW DETAILS
232	MA-5	ARCHITECTURAL - WINDOW AND LOUVER DETAILS
233	MA-6	ARCHITECTURAL - MISCELLANEOUS DETAILS
234	MC-1	CIVIL – MISCELLANEOUS DETAILS
235	MC-2	CIVIL – MISCELLANEOUS DETAILS
236	MC-3	CIVIL – MISCELLANEOUS DETAILS
237	MC-4	CIVIL – MISCELLANEOUS DETAILS
238	MC-5	CIVIL – MISCELLANEOUS DETAILS
239	MS-1	STRUCTURAL – STRUCTURAL NOTES
240	MS-2	STRUCTURAL – STANDARD CONCRETE JOINT DETAILS
241	MS-3	STRUCTURAL – STANDARD CONCRETE REINFORCEMENT DETAILS
242	MS-4	STRUCTURAL – TYPICAL MASONRY WALL REINFORCEMENT DETAILS
243	MS-5	STRUCTURAL – TYPICAL MASONRY LINTEL, JAMB, AND MISCELLANEOUS DETAILS
244	MS-6	STRUCTURAL – GUARDRAIL AND HANDRAILING DETAILS
245	MS-7	STRUCTURAL – TYPICAL ALUMINUM STAIR DETAILS
246	MS-8	STRUCTURAL – STD CONC BEAM/SLAB SCHEDULE & NOTES
247	MS-9	STRUCTURAL – STD CONC COL & PILASTER SCHED & DETAILS
248	MS-10	STRUCTURAL – MISCELLANEOUS STRUCTURAL DETAILS
249	MP-1	PLUMBING – SCHEDULES
250	MP-2	PLUMBING – DETAILS
251	MP-3	PLUMBING – RISER DIAGRAMS
252	MH-1	HVAC – SCHEDULES
253	MH-2	HVAC – SCHEDULES
254	MH-3	HVAC – SEQUENCE OF OPERATIONS
255	MH-4	HVAC – DETAILS
256	ME-1	ELECTRICAL - MISCELLANEOUS PLANS
257	ME-2	ELECTRICAL – LIGHTING PANEL SCHEDULES
258	ME-3	ELECTRICAL – LIGHTING FIXTURE SCHEDULE
259	ME-4	ELECTRICAL – MISCELLANEOUS DETAILS
260	MI-1	P&ID - INSTRUMENT INSTALLATION DETAILS
261	MI-2	P&ID - INSTRUMENT INSTALLATION DETAILS

DRAWING LEGEND

1ST LETTER	AREA DESIGNATION
A	OPERATIONS BUILDING
B	RETURN SLUDGE PUMP STATION
C	CHEMICAL STORAGE AND FEED FACILITY
D	OXIDATION DITCH / AERATION BASINS
E	FINAL CLARFIER NO.1
F	CHLORINE CONTACT BASINS
G	GENERAL
H	HEADWORKS BUILDING
M	MISCELLANEOUS SCHEDULES AND STANDARD DETAILS
N	NORTHSIDE WWTP DAF POLYMER FEED FACILITY
P	PORT SOUTH LIFT STATION
S	SITE WORK
T	SLUDGE TRANSFER PUMP STATION

2ND LETTER	DISCIPLINE DESIGNATION
A	ARCHITECTURE
C	CIVIL - CIVIL/STRUCTURAL
E	ELECTRICAL
H	HVAC
I	INSTRUMENTATION AND CONTROLS
P	PLUMBING
S	STRUCTURAL

LOWER BIRD CREEK WWTP EXPANSION
TMUA PROJECT NO. ES 2006-01
CONTRACT 1B

GENERAL
CIVIL
DRAWING LIST

CITY OF TULSA, OKLAHOMA
TULSA METROPOLITAN UTILITY AUTHORITY
ENGINEERING SERVICES DEPARTMENT

PLANS AND ESTIMATES PREPARED BY:

BLACK & VEATCH Building a world of difference. Black & Veatch Corporation Kansas City, Missouri

Holloway, Updike and Bellen Consulting Engineers Muskogee · Broken Arrow

OWGATES Engineering Services

REGISTERED PROFESSIONAL ENGINEER KURT ARLAN RONNEKAMP 17439 OKLAHOMA

REVISION	BY	DATE

PLAN SCALE:	DRAWN	JKS		APPROVED:
	DESIGNED	JMS		
	SURVEY			
PROFILE SCALE:	FIELD MGR.		10/11	
HORIZONTAL: 1" =	SECT. MGR.			
	PROJ. MGR.		10/3/11	
VERTICAL 1" =	RECOMMENDED:		10/26/11	DIRECTOR
FILE:	DRAWING: GC-2			DATE 10/28/2011
ATLAS PAGE NO:				SHEET 2 OF 261 SHEETS

B&V PROJECT NO. 145120

9-28-11

PLOTTED DATE: SAN56265, 9/26/2011 8:55:57 AM
SAVED DATE: SAN56265, 9/23/2011 4:01:14 PM
CYGNET ID: 145120-3000-C-B0000SG3L

FD145120
D145120BV

GENERAL NOTES FOR CIVIL DRAWINGS

1. HORIZONTAL CONTROL: COORDINATES ARE BASED ON THE STATE PLANE COORDINATE SYSTEM (NAD83). COORDINATES ON STRUCTURES DEPICT THE EXTERIOR FACE OF THE CONCRETE SUBSTRUCTURE FOUNDATION WALL OR FOOTING WALL.

2. VERTICAL CONTROL: ELEVATIONS ARE BASED ON THE STATE PLANE COORDINATE SYSTEM (NAD83). BENCHMARKS AND/OR STRUCTURE ELEVATIONS FROM EXISTING SURVEYS OR REFERENCE DRAWINGS MAY RESULT IN VARIANCES WITH ELEVATIONS INDICATED ON THE DRAWINGS FOR EXISTING FACILITIES.

3. THE PROJECTED 100 YEAR FLOOD ELEVATION IS 574 FEET.

4. EXISTING UTILITIES AND STRUCTURES (UNDERGROUND, SURFACE, OR OVERHEAD) ARE INDICATED ONLY TO THE EXTENT THAT SUCH INFORMATION WAS KNOWN, OR MADE AVAILABLE TO, OR DISCOVERED BY THE ENGINEER IN PREPARING THE DRAWINGS. THE LOCATIONS, CONFIGURATIONS, AND ELEVATIONS OF SUBSURFACE FACILITIES AND UTILITIES ARE APPROXIMATE, AND NOT ALL UTILITIES AND FACILITIES MAY BE INDICATED. OVERHEAD UTILITIES ARE NOT INDICATED IN ARCHITECTURAL ELEVATIONS, PROFILE OR SECTION DRAWINGS. THE ENGINEERING INVESTIGATIONS, LOCATION, AND DESIGNATION OF SUBSURFACE UTILITIES INDICATED IN THESE CONTRACT DOCUMENTS HAS BEEN PERFORMED TO QUALITY LEVEL C IN ACCORDANCE WITH GENERALLY ACCEPTED ENGINEERING PRINCIPLES AND PRACTICES AS OUTLINED IN ASCE STANDARD AND GUIDELINE BULLETIN CI/ASCE 38-02 UNLESS OTHERWISE DESIGNATED. WHERE SUCH ACTIVITIES HAVE BEEN TO A HIGHER LEVEL OF QUALITY, THE HIGHER QUALITY LEVEL FOR THE AFFECTED AREAS IS INDICATED IN THE CONTRACT DOCUMENTS.

5. "SCREENED" (LIGHT) DELINEATION INDICATED ON THE DRAWINGS DENOTES EXISTING FACILITIES. "SCREENED" INFORMATION WAS TAKEN FROM EXISTING CONSTRUCTION DRAWINGS AND DATA, IS FOR REFERENCE ONLY, AND SHALL BE FIELD VERIFIED BY THE CONTRACTOR PRIOR TO THE ORDERING OF MATERIALS AND BEGINNING OF CONSTRUCTION. "BOLD" DELINEATION IS NEW WORK TO BE CONSTRUCTED UNDER THIS CONTRACT.

6. CONTRACTOR'S STAGING, PARKING AND MATERIAL STORAGE SHALL BE LIMITED TO THE SPACE(S) DESIGNATED ON THE DRAWINGS. PROVIDING ADDITIONAL STORAGE OR PARKING SHALL BE THE RESPONSIBILITY OF THE CONTRACTOR.

7. CALL 1-800-522-6543 BEFORE YOU DIG. CONTRACTOR SHALL VERIFY PRECISE LOCATIONS AND ELEVATIONS OF ALL UTILITIES AND STRUCTURES, WHETHER INDICATED ON THE DRAWINGS OR NOT, IN THE FIELD IN ADVANCE OF EXCAVATING, BY CONTACTING ALL UTILITIES AND OTHER AGENCIES, AND BY PROSPECTING. CONTRACTOR SHALL BE RESPONSIBLE FOR REMOVAL, DEMOLITION, RECONSTRUCTION, AND RECONNECTION OF EXISTING FACILITIES AS REQUIRED TO COMPLETE THE WORK. IF REQUIRED AFTER FIELD VERIFICATION, CONTRACTOR SHALL COORDINATE WITH THE ENGINEER TO DETERMINE ANY NECESSARY MODIFICATIONS TO PROPOSED NEW WORK.

8. BEFORE CONSTRUCTION IS STARTED, CONTRACTOR SHALL COORDINATE WITH THE OWNER OF EACH UTILITY AND DEFINE THE REQUIREMENTS AND METHODS TO ACCOMMODATE THE PROTECTION, TEMPORARY SUPPORT, ADJUSTMENT, OR RELOCATION OF ANY UTILITIES AFFECTED BY THE PROPOSED NEW WORK.

9. CONTRACTOR SHALL TAKE SPECIAL PRECAUTIONS IN VICINITY OF ANY OVERHEAD ELECTRIC LINES. CONTRACTOR SHALL ABIDE BY NATIONAL ELECTRIC CODE AND ANY REQUIREMENTS BY OWNER OF ELECTRIC LINE.

10. CONTRACTOR SHALL COMPLY WITH THE GOVERNING AGENCY NPDES CONSTRUCTION REQUIREMENTS, AND SHALL PROVIDE APPROPRIATE MITIGATION MEASURES OR PROTECTION AND RESTORATION AT ALL LOCATIONS AS REQUIRED BY THEIR OPERATIONS, AND AS DIRECTED BY ENGINEER. SPECIAL CONSTRUCTION REQUIREMENTS, TEMPORARY PROTECTIVE FENCING OR BARRICADES, SHEETING, SHORING, EROSION PROTECTION, AND SURFACE RESTORATION AT CERTAIN LOCATIONS ARE INDICATED ON THE DRAWINGS TO BRING CONTRACTOR'S ATTENTION TO SENSITIVE AREAS.

11. THE CONTRACTOR IS RESPONSIBLE FOR PROVIDING EROSION AND SEDIMENT CONTROL BEST MANAGEMENT PRACTICES (BMPS) TO PREVENT SEDIMENT FROM REACHING PAVED AREAS, STORM SEWER SYSTEMS, DRAINAGE COURSES AND ADJACENT PROPERTIES. MINIMUM REQUIREMENTS FOR EROSION AND SEDIMENT CONTROL ARE INDICATED ON THE EROSION CONTROL PLAN SHEETS AND SHALL CONFORM TO CITY REQUIRED BMPS. IN THE EVENT THE PREVENTION MEASURES ARE NOT EFFECTIVE, THE CONTRACTOR SHALL REMOVE ANY DEBRIS, SILT, OR MUD AND RESTORE THE RIGHT-OF-WAY OR ADJACENT PROPERTY TO ORIGINAL OR BETTER CONDITION.

12. THE CONTRACTOR SHALL BE RESPONSIBLE FOR THE PROTECTION OF ALL PROPERTY CORNER MARKERS. PROPERTY CORNER MARKERS DAMAGED BY CONSTRUCTION ACTIVITIES SHALL BE REESTABLISHED BY A PROFESSIONAL SURVEYOR LICENSED IN THE STATE OF OKLAHOMA.

13. THE LOCATION OF TEST HOLES INDICATED ON THE DRAWINGS IS APPROXIMATE. CONTRACTOR SHALL REFER TO THE GEOTECHNICAL REPORT FOR ACTUAL TEST HOLE LOCATIONS AND THE FINDINGS OF THE GEOTECHNICAL INVESTIGATIONS.

14. CONTRACTOR SHALL PROTECT AND MAINTAIN ALL EXISTING TREES, SHRUBS, AND PLANTS UNLESS OTHERWISE NOTED.

15. CONTRACTOR TO CONTROL DUST CAUSED BY THE WORK AND, AS A MINIMUM, COMPLY WITH POLLUTION CONTROL REQUIREMENTS SPECIFIED.

16. CONTRACTOR SHALL INSTALL ALL PIPELINES, PAVING, WALKWAYS, AND CURB AND GUTTER AT A UNIFORM GRADE BETWEEN ELEVATIONS DEPICTED ON THE DRAWINGS.

17. THE CONTRACTOR SHALL BE RESPONSIBLE FOR THE RESTORATION OF THE RIGHT-OF-WAY AND FOR DAMAGED IMPROVEMENTS SUCH AS CURBS, DRIVEWAYS, SIDEWALKS, STREET LIGHT AND TRAFFIC SIGNAL LOOP LEAD INS, SIGNAL POLES, IRRIGATION SYSTEMS, ETC. DAMAGED IMPROVEMENTS SHALL BE REPAIRED IN CONFORMANCE WITH THE LATEST CITY STANDARDS AND TO THE CITY'S SATISFACTION.

18. THE CONTRACTOR SHALL SEED OR SOD ALL DISTURBED AREAS WITHIN THE PUBLIC STREET RIGHT-OF-WAY AS REQUIRED IN THE SPECIFICATIONS UNLESS OTHERWISE NOTED ON THE PLANS OR IF SPECIFIC WRITTEN APPROVAL IS GRANTED BY THE CITY.

19. ALL DAMAGE CAUSED DIRECTLY OR INDIRECTLY TO THE STREET SURFACE OR SUBSURFACE OUTSIDE OF THE PAVEMENT CUT AREA SHALL BE REGARDED AS A PART OF THE STREET CUT REPAIR. THIS INCLUDES ANY SCRAPES, GOUGES, CUTS, CRACKING, DEPRESSIONS AND/OR ANY OTHER DAMAGE CAUSED BY THE CONTRACTOR DURING THE EXECUTION OF THE WORK. THESE AREAS WILL BE INCLUDED IN THE TOTAL AREA OF REPAIR. ALL REPAIRS SHALL BE AT THE CONTRACTOR'S EXPENSE AND SHALL MEET ALL REQUIREMENTS AND SPECIFICATION OF THE CONTRACT DOCUMENTS AND THE CITY STANDARDS.

20. FOR ALL SITE GRADING, SMOOTH PARABOLIC TRANSITIONS SHALL BE MADE BETWEEN CHANGES IN SLOPE. PARABOLIC ROUNDING SHALL APPLY TO ALL CUT AND FILL SECTIONS.

21. FINISHED GRADE ELEVATION AT THE BUILDING FACE, WHERE NOT ADJACENT TO PAVEMENT, SHALL BE APPROXIMATELY 6 INCHES BELOW FINISHED FLOOR ELEVATION UNLESS OTHERWISE NOTED. FINISHED GRADE ELEVATION ADJACENT TO BASINS SHALL BE APPROXIMATE AS INDICATED BY CONTOURS, OR AS REQUIRED TO MEET STAIR LANDINGS.

22. THE CONTRACTOR'S OPERATIONS SHALL CONFORM TO THE RULES AND REGULATIONS OF THE STATE CONSTRUCTION SAFETY ORDERS PERTAINING TO EXCAVATION AND TRENCHING.

23. ALL JOINTS FOR BURIED PIPING SHALL BE RESTRAINED. WITH THE EXCEPTION OF THE 54" PLANT EFFLUENT LINE. (1)

24. THE DRAWINGS INDICATE TYPES OF PIPE SUPPORT SYSTEMS AT VARIOUS LOCATIONS. HOWEVER, All PIPE SUPPORTS, HANGERS, BRACKETS, INSERTS OR BRACES ARE NOT SHOWN. CONTRACTOR SHALL REFER TO THE SPECIFICATIONS AND PROVIDE A COMPLETE SUPPORT SYSTEM AS REQUIRED.

25. THE TERM "PROPOSED" AS INDICATED ON THE DRAWINGS MEANS THE ITEM IS DESIGNED OR PLANNED TO BE PROVIDED BY OWNER OR OTHERS SEPARATE FROM THIS CONTRACT. THE TERM "FUTURE" AS INDICATED ON THE DRAWINGS REFERS TO THE ENGINEER'S INTERPRETATION OF THE ITEM FOR THE FUTURE, BASED ON AVAILABLE INFORMATION.

26. THE EXISTING PROCESS FACILITIES SHALL REMAIN IN OPERATION CONTINUOUSLY THROUGHOUT THE CONSTRUCTION ACTIVITIES. INDIVIDUAL PROCESS FACILITIES CAN BE TAKEN OUT OF SERVICE FOR LIMITED PERIODS OF TIME TO FACILITATE CONSTRUCTION AS SPECIFIED IN THE CONTRACT DOCUMENTS.

27. STRUCTURES SUCH AS CURBS AND GUTTERS, CONCRETE AND ASPHALT DRIVES AND WALKWAYS, PAVING BRICKS, FENCING, RETAINING WALLS, ETC., CROSSED BY THE PIPELINE ARE NOT ALL INDICATED IN PROFILE. CONTRACTOR SHALL RESTORE ANY EXISTING STRUCTURES THAT ARE DISTURBED, DAMAGED OR REMOVED BY CONSTRUCTION.

28. CONTRACTOR SHALL REPLACE EXISTING PIPE CULVERTS THAT ARE REMOVED TO INSTALL THE NEW PIPELINE WITH NEW PIPE CULVERTS OF THE SAME SIZE, MATERIAL AND CONSTRUCTION AT THE SAME LOCATION AND INVERT ELEVATION AS THOSE THAT WERE REMOVED, AND SHAPE THE DITCH TO DRAIN WITH THE REPLACED CULVERT. CONTRACTOR SHALL PROVIDE ANY TEMPORARY CULVERTS THAT MAY BE REQUIRED FOR CONTRACTOR'S OPERATIONS. CONTRACTOR SHALL COORDINATE REMOVAL AND REPLACEMENT OF ANY CULVERTS WITHIN PUBLIC RIGHT-OF-WAY WITH THE REGULATING AGENCY.

29. HORIZONTAL STATIONING ALONG THE PIPELINE ALIGNMENT IS FOR LEVEL LINE MEASUREMENT AND FOR PAYMENT OF THE PIPELINES. CONTRACTOR SHALL PROVIDE THE ACTUAL PIPE LENGTH TO BE DETERMINED BY THE SLOPE OR CURVE ON WHICH THE PIPE IS INSTALLED.

30. UNLESS OTHERWISE SPECIFIED, INDICATED ON THE DRAWINGS, OR DIRECTED BY THE ENGINEER, INSTALL PIPELINES SLOPING DOWNWARD FROM AN AIR VALVE MINIMUM 3'-0" COVER AT MANHOLE OR AT MANUAL ARV TO A BLOWOFF, AND PROVIDE THE SPECIFIED MINIMUM PIPE COVER. MINIMUM PIPE COVER SHALL BE FROM THE EXISTING, PROPOSED, OR FUTURE GROUND SURFACE OR ROAD PROFILE, WHICHEVER GROUND SURFACE OR ROAD PROFILE IS APPLICABLE AS INDICATED ON THE DRAWINGS. IF THE PROPOSED GROUND SURFACE IS ABOVE THE EXISTING GROUND SURFACE INDICATED ON THE DRAWINGS AND IS NOT THE ACTUAL GROUND SURFACE AT THE TIME OF PIPELINE INSTALLATION, INSTALL THE PIPELINE TO PROVIDE MINIMUM PIPE COVER FROM THE ACTUAL GROUND SURFACE IF ACCEPTABLE TO THE ENGINEER. HIGH POINTS IN THE PIPELINE WILL NOT BE PERMITTED EXCEPT AT LOCATIONS OF AIR VALVES AS INDICATED ON THE DRAWINGS. REVIEW THE PIPELINE PROFILE REQUIREMENTS WITH THE ENGINEER PRIOR TO PREPARING LAYING SCHEDULES AND PERFORMING FIELD STAKING.

31. CONTRACTOR SHALL FIELD VERIFY PRECISE LOCATION, ELEVATION, AND ARRANGEMENT OF CONNECTIONS OF NEW PIPELINES WITH EXISTING PIPELINES BASED ON FIELD CONDITIONS, INCLUDING EXPOSING EXISTING PIPING PRIOR TO FABRICATING NEW PIPING. CONTRACTOR SHALL PROVIDE FITTINGS, ADAPTERS, SOLID SLEEVE CLOSURES, AND HARNESSED MECHANICAL COUPLING; ROTATE FITTINGS; DEFLECT JOINTS; AND MODIFY EXISTING PIPING AS APPLICABLE AND AS REQUIRED TO MAKE CONNECTIONS, INCLUDING ADJUSTMENTS FOR ANY OFFSETS IN CENTERLINE ELEVATIONS BETWEEN PIPELINES. CONTRACTOR SHALL PROVIDE TEMPORARY PLUG WITH FACTORY OUTLET SIZED AS REQUIRED FOR CONTRACTOR'S TESTING AND DISINFECTION WORK BEFORE MAKING CONNECTION, WHEN APPLICABLE. CONTRACTOR SHALL COORDINATE MAKING EACH CONNECTION WITH THE OWNER.

32. ALL DIP SHALL BE PROTECTED WITH A MINIMUM OF ONE WRAP OF POLYETHYLENE ENCASEMENT. LOCATIONS WHERE DIP IS TO BE DOUBLE WRAPPED WITH POLYETHYLENE ENCASEMENT, AND PCCP IS TO BE WRAPPED (SINGLE OR DOUBLE) WITH POLYETHYLENE ENCASEMENT ARE SPECIFIED AND INDICATED ON THE DRAWINGS.

33. THE CONTRACTOR IS RESPONSIBLE TO ENSURE THAT NO OVERFLOW OR SPILLAGE OF TREATED OR UNTREATED SEWAGE OCCURS. SHOULD THIS OCCUR, THE CONTRACTOR SHALL:
    A. IDENTIFY THE SOURCE OF THE SPILL AND ATTEMPT TO ELIMINATE ANY ADDITIONAL SPILLAGE. NOTIFY THE CITY OF TULSA.
    B. CONTAIN THE SPILL IN PLACE AND PREVENT CONTAMINATION OF STREAMS.
    C. CLEAN UP THE SPILL AND DISPOSE OF CONTAMINATED MATERIALS.

34. CONTRACTOR SHALL PROVIDE A TOTAL OF 10, 7 INCH BY 10 INCH YELLOW POLYESTER SIGNS WITH ADHESIVE BACKING WITH THE FOLLOWING LETTERING IN BLACK: "CAUTION NON-POTABLE WATER DO NOT DRINK." SIGNS SHALL BE USA BLUEBOOK ITEM NO. 46151 OR APPROVED EQUAL. CONTRACTOR SHALL PROVIDE SIGNS TO THE OWNER FOR INSTALLATION. PAYMENT FOR THESE ITEMS SHALL BE INCLUDED IN BID ITEM NO. 2 - LBCWWTP EXPANSION IMPROVEMENTS, COMPLETE IN PLACE.

35. CONTRACTOR SHALL PROVIDE A TOTAL OF 5, 7 INCH BY 10 INCH YELLOW FIBERGLASS SIGNS WITH THE FOLLOWING LETTERING IN BLACK: "CAUTION NON-POTABLE WATER DO NOT DRINK". SIGNS SHALL BE USA BLUEBOOK ITEM NO. 46149 OR APPROVED EQUAL. CONTRACTOR SHALL PROVIDE SIGNS COMPLETE WITH T-POSTS AND MOUNTING HARDWARE AND INSTALL THE SIGNS AT VARIOUS LOCATIONS WITHIN THE PLANT AS DIRECTED BY THE OWNER. PAYMENT FOR THESE ITEMS SHALL BE INCLUDED IN BID ITEM NO. 2 - LBCWWTP EXPANSION IMPROVEMENTS, COMPLETE IN PLACE.

36. THE CITY OF TULSA STANDARD SPECIFICATIONS AND STANDARD DETAILS, MAY 2005 ARE HEREBY ADOPTED AS PART OF THESE CONSTRUCTION DOCUMENTS WHERE REFERENCE IS MADE. SAID SPECIFICATIONS WILL BE HEREINAFTER REFERRED TO AS THE "STANDARD SPECIFICATIONS".

37. THE OKLAHOMA DEPARTMENT OF TRANSPORTATION STANDARD SPECIFICATIONS FOR HIGHWAY CONSTRUCTION, 1999 EDITION ARE HEREBY ADOPTED AS PART OF THESE CONSTRUCTION DOCUMENTS WHERE REFERENCE IS MADE. SAID SPECIFICATIONS WILL BE HEREINAFTER REFERRED TO AS THE "ODOT STANDARD SPECIFICATIONS".

REGISTERED PROFESSIONAL ENGINEER
KURT ARLAN RONNEKAMP
17439
OKLAHOMA

REVISION	BY	DATE
Addendum No. (1)	PSB	1-6-12

LOWER BIRD CREEK WWTP EXPANSION
TMUA PROJECT NO. ES 2006-01
CONTRACT 1B

GENERAL
CIVIL
GENERAL NOTES

CITY OF TULSA, OKLAHOMA
TULSA METROPOLITAN UTILITY AUTHORITY
ENGINEERING SERVICES DEPARTMENT

PLANS AND ESTIMATES PREPARED BY:
BLACK & VEATCH Building a world of difference. Black & Veatch Corporation Kansas City, Missouri
Holloway, Updike and Bellon Consulting Engineers Muskogee · Broken Arrow
DWGATES Engineering Services

PLAN SCALE:	DRAWN	JKS		APPROVED:
	DESIGNED	JMS		
	SURVEY			
PROFILE SCALE:	FIELD MGR.	TDS	10/11	
HORIZONTAL: 1" =	SECT. MGR.			
	PROJ. MGR.	PSB	10/3/11	
VERTICAL 1" =	RECOMMENDED: TDS 10/26/11			DIRECTOR
FILE:	DRAWING: GC-3			DATE 10/28/2011
ATLAS PAGE NO:				SHEET 3 OF 261 SHEETS

B&V PROJECT NO. 145120
JBJ 9-28-11

PLOTTED DATE: 9/27/2011 5:04:55 PM, Batch Plot
SAVED DATE: 9/27/2011 9:20:03 AM
C:\GNET ID: 145120-3000-C-B0000S045

FD145120
D145120BV

Pay Item	Spec No.	Item Description	Pay Item Notes	Units	Estimated Quantity
1	01025	MOBILIZATION	1	EA	1
2	01025	LBCWWTP EXPANSION COMPLETE IN PLACE LESS ALL OTHER PAY ITEMS LISTED HEREIN	1	LS	1
3	SHEET SC-25	CHEMICAL DUCT BANK A	1	LF	25
4	SHEET SC-25	CHEMICAL DUCT BANK B	1	LF	(2) 245
5	15067	1" GAS (HDPE)	1	LF	220
6	15067	1-1/2" GAS (HDPE)	1	LF	220
7	15067	1-1/2" (PVC)	1	LF	(2) 300
8	15067	2" (PVC)	1	LF	1,090
9	15067	2" GAS (HDPE)	1	LF	(2) 110
10	15067	2 1/2" (PVC)	1	LF	780
11	15067	3" GAS (HDPE)	1	LF	1,350
12	15061	4" DIP	1	LF	345
13	15061	6" DIP	1	LF	3,095
14	15061	8" DIP	1	LF	550
15	15061	12" DIP	1	LF	210
16	15061	16" DIP	1	LF	430
17	15061	24" DIP	1	LF	570
18	15061	30" DIP	1	LF	500
19	02616, 15061, OR 15068	36" YARD PIPING	1	LF	365
20	02616, 15061, OR 15068	48" YARD PIPING	1	LF	370
21	02616, 15061, OR 15068	54" YARD PIPING	1	LF	880
22	15061	4" - TEE	1	EA	2
23	15061	4" x 2" - REDUCER	1	EA	2
24	15061	4" x 2 1/2" - REDUCER	1	EA	1
25	15061	4"- 90 DEGREE BEND	1	EA	1
26	15061	4" MJ PLUG	1	EA	1
27	15061	4" CLEANOUT	1	EA	1
28	15100	6" HYDRANT	1	EA	1
29	15102	6" PLUG VALVE	1	EA	1
30	15061	6" MJ PLUG	1	EA	1
31	15104	6" GATE VALVE	1	EA	6
32	15061	6" - 45 DEGREE BEND	1	EA	36
33	15061	6" - 90 DEGREE BEND	1	EA	13
34	15061	6" - WYE	1	EA	1
35	15061	6" - TEE	1	EA	4
36	15061	6" x 4" x 6"- REDUCING TEE	2	EA	3
37	15061	6" x 2" - REDUCER	1	EA	3
38	15061	6" SLEEVE	1	EA	1
39	T505	6" METER ASSEMBLY AND VAULT	1, 2	EA	1
40	15102	8" PLUG VALVE	1	EA	2
41	15061	8" MJ PLUG	1	EA	1
42	15061	8" - 45 DEGREE BEND	1	EA	7
43	15061	8" - 90 DEGREE BEND	1	EA	2
44	15061	8" - TEE	1	EA	1
45	15102	12" PLUG VALVE	1	EA	1
46	15101	12" BFV	1	EA	1
47	15061	12" - 22 1/2 DEGREE BEND	1	EA	2
48	15061	12" - 90 DEGREE BEND	1	EA	2
49	15061	12" - TEE	1	EA	1
50	15102	16" PLUG VALVE	1	EA	2
51	15061	16" MJ PLUG	1	EA	2
52	15061	16" - 45 DEGREE BEND	1	EA	3
53	15061	16" - 90 DEGREE BEND	1	EA	2
54	15061	16" x 6" x 16" - TEE	1	EA	1
55	15061	16" x 12" - REDUCER	1	EA	1
56	15061	20" MJ PLUG	1	EA	1
57	15102	24" PLUG VALVE	1	EA	(2) 6
58	15061	24" MJ PLUG	1	EA	1
59	15101	24" BFV	1	EA	1
60	15061	24" - 11 1/4 DEGREE BEND	1	EA	2
61	15061	24" - 22 1/2 DEGREE BEND	1	EA	2
62	15061	24" - 45 DEGREE BEND	1	EA	(2) 13
63	15061	24" - 90 DEGREE BEND	1	EA	2
64	15061	24" - WYE	1	EA	1
65	15061	24" - TEE	1	EA	4
66	15061	24" x 16" - REDUCER	1	EA	2
67	15061	24" SLEEVE COUPLING	1	EA	(2) 7
68	15061	30" - TEE	1	EA	4
69	15102	30" PLUG VALVE	1	EA	1
70	15061	30" MJ PLUG	1	EA	3
71	15061	30" - 45 DEGREE BEND	1	EA	2
72	15061	30" - 90 DEGREE BEND	1	EA	2
73	15061	30" x 16" - REDUCER	1	EA	1
74	15061 (1)	30" x 20" x 30" - REDUCING TEE	1	EA	1
75	15061	30" x 24" - REDUCER	1	EA	(2) 6
76	15102	36" PLUG VALVE	1	EA	1
77	~~02616, 15061, OR 15068~~	36" MJ PLUG	1	EA	3
78	15101	36" BFV	1	EA	2
79 (1)	~~02616, 15061, OR 15068~~	36" - 22 1/2 DEGREE BEND	1	EA	2
80	02616, 15061, OR 15068	36" - 45 DEGREE BEND	1	EA	1
81	02616, 15061, OR 15068	36" - 90 DEGREE BEND	1	EA	1
82	02616, 15061, OR 15068	36" - WYE	1	EA	2
83	02616, 15061, OR 15068	36" x 24" - REDUCER	1	EA	1

Pay Item	Spec No.	Item Description	Pay Item Notes	Units	Estimated Quantity
84	02616, 15061 OR 15068	48" MJ PLUG	1	EA	2
85	15101	48" BFV	1	EA	1
86	02616, 15061 OR 15068	48" - 45 DEGREE BEND	1	EA	1
87	02616, 15061 OR 15068	48" - WYE	1	EA	1
88	02616, 15061 OR 15068	48" - TEE	1	EA	3
89	02616, 15061 OR 15068	48" x 24" REDUCER	1	EA	1
90	02616, 15061 OR 15068	48" x 36" REDUCER	1	EA	3
91	02616, 15061 OR 15068	48" SLEEVE COUPLING	1	EA	2
92	02616, 15061 OR 15068	54" PIPE BELL	1	EA	5
93	02616, 15061 OR 15068	54" FABRICATED PLUG	1	EA	3
94	15010	VALVE BOX	1	EA	33
95	Special	CHEMICAL FEED MANHOLE	1	EA	2
96	Special	HEADWORKS EXCESS FLOW VAULT AND ASSEMBLY	1	EA	1
97	Special	PORT SOUTH EXCESS FLOW VAULT AND ASSEMBLY	1	EA	1
98	Special	HEADWORKS EFFLUENT METERING VAULT AND ASSEMBLY	1	EA	1
99	Special	WAS METERING VAULT AND ASSEMBLY	1	EA	1
100	202(A)	UNCLASSIFIED EXCAVATION	1, 3	CY	2,500
101	202(B)	UNCLASSIFIED BORROW	1, 3	CY	11,500
102	205	SALVAGE TOP SOIL - TYPE A	1, 3	SY	(2) 25,300
103	223	TEMPORARY SILT FENCE	1, 3	LF	3,000
104	232(A)	SEEDING METHOD 'A'	1, 3	AC	6
105	325	SOLID SLAB SODDING	1, 3	SY	(2) 5,000
106	303	AGGREGATE BASE TYPE 'A'	1, 3	CY	3,920
107	310(B)	SUBGRADE METHOD 'B'	1, 3	SY	9,950
108	325	SEPARATOR FABRIC	1, 3	SY	(2) 9,950
109	411(A)	ASPHALT CONCRETE TYPE A (PG 64-22)	1, 3	TON	2,900
110	411(B)	ASPHALT CONCRETE TYPE B (PG 64-22)	1, 3	TON	1,800
111	414	6" CONCRETE PAVEMENT (PCC)	1, 3	SY	100
112	601(A)	TYPE 1 RIP RAP	1, 3	CY	20
113	609(B)	CONCRETE CURB AND GUTTER	1, 3	LF	6,200
114	610(A)	CONCRETE SIDEWALK	1, 3	SY	485
115	610(B)	8" CLASS 'A' CONCRETE	1, 3	SY	200
116	611(A)	PRECAST MANHOLE (4' DIA)	1, 3	EA	2
117	611(B)	ADDITIONAL DEPTH IN MANHOLE	1, 3	VF	4
118	611(D)	MANHOLE FRAME AND COVER	1, 3	EA	2
119	611(G)	C.I. INLET FRAME AND GRATE	1, 3	EA	6
120	611(K)	C.I. CURB INLET	1, 3	EA	6
121	611(L)	DROP INLET GRATE	1, 3	EA	10
122	611(M)	SMD - TYPE 1	1, 3	EA	10
123	613(B)	12" RCP, CLASS III	1, 3	LF	100
124	613(B)	15" RCP, CLASS III	1, 3	LF	135
125	613(B)	18" RCP, CLASS III	1, 3	LF	800
126	613(B)	27" RCP, CLASS III	1, 3	LF	450
127	613(B)	36" RCP, CLASS III	1, 3	LF	315
128	619(B)	2" MILL (2)	1, 3	SY	4,500
129	624(D)	CHAIN LINK FENCE (6')	1, 3	LF	2,600
130	653	CONCRETE HEADWALL	1, 3	EA	3
131	Special	CONCRETE TRICKLE CHANNEL	1	SY	(2) 280
132	Special	PACKAGED PUMP STATION	1	EA	1
133	11550	PROVIDE AND INSTALL ROTOR (BRUSH) AERATORS	1	EA	2
134	11321 AND 11321	PROVIDE AND INSTALL EUTEK GRIT REMOVAL, SEPARATION, AND CLASSIFICATION EQUIPMENT	1	EA	2
135	12510	OFFICE FURNITURE	1	EA	1
136	01025	MEP ALLOWANCE	1	ALLOW	1
137	01025	SECURITY ALLOWANCE	1	ALLOW	1
138	01025	LABORATORY EQUIPMENT ALLOWANCE	1	ALLOW	1

PAY ITEM NOTES

1. SEE SECTION 01025-MEASUREMENT AND PAYMENT FOR ADDITIONAL REQUIREMENTS.
2. SEE CITY OF TULSA STANDARD SPECIFICATIONS.
3. SEE ODOT STANDARD SPECIFICATIONS.

PAY ITEM ABBREVIATIONS

AC-ACRE
ALLOW-ALLOWANCE
BFV-BUTTERFLY VALVE
CI-CAST IRON
CY-CUBIC YARD
DIP-DUCTILE IRON PIPE
EA-EACH
HDPE-HIGH DENSITY POLYETHYLENE
LF-LINEAR FEET
LS-LUMP SUM
MEP-MECHANICAL, ELECTRICAL, AND PLUMBING
MJ-MECHANICAL JOINT
PCC-PORTLAND CEMENT CONCRETE
PVC-POLYVINYL CHLORIDE
RCP-REINFORCED CONCRETE PIPE
SMD-SINGLE MEDIAN DRAIN
SY-SQUARE YARD
VF-VERTICAL FEET

LOWER BIRD CREEK WWTP EXPANSION
TMUA PROJECT NO. ES 2006-01
CONTRACT 1B

GENERAL
CIVIL
PAY QUANTITIES

CITY OF TULSA, OKLAHOMA
TULSA METROPOLITAN UTILITY AUTHORITY
ENGINEERING SERVICES DEPARTMENT

PLANS AND ESTIMATES PREPARED BY:

BLACK & VEATCH Building a world of difference. Black & Veatch Corporation Kansas City, Missouri

Holloway, Updike and Ballew Consulting Engineers Muskogee - Broken Arrow

DUGATES Engineering Services

REGISTERED PROFESSIONAL ENGINEER KURT ARLAN RONNEKAMP 17439 OKLAHOMA 9/23/11

REVISION		BY	DATE
ADDENDUM NO. 1	(1)	PSB	1-6-12
ADDENDUM NO. 2	(2)	PSB	1-13-12

PLAN SCALE:
PROFILE SCALE:
HORIZONTAL: 1" =
VERTICAL 1" =

DRAWN	JKS	
DESIGNED	JMS	
SURVEY		
FIELD MGR.		10/11
SECT. MGR.		
PROJ. MGR.		10/12/11
RECOMMENDED:		10/20/11

APPROVED:
DIRECTOR

FILE: DRAWING: GC-3A
DATE 10/28/2011
ATLAS PAGE NO:
SHEET 4 OF 261 SHEETS

GLA10863, 1/12/2012 3:27:39 PM
SCH42738, 5/3/2012 1:54:14 PM
PW FLDR: 145120...\General

FD145120

A	ACID, AMBER INDICATING LIGHT,AMP
AB	ANCHOR BOLT
ABS	ACID BATH SINK
AC	ALTERNATING CURRENT
A/C	AIR CONDITIONER, (ING)
ACP	ASBESTOS CEMENT PIPE, AIR CONTROL PANEL
ACST	ACOUSTIC
AD	ACCESS DOOR, AREA DRAIN, AIR DAMPER, ANODE
ADD	ADDITIONAL
ADH	ADHESIVE
ADJ	ADJUSTABLE, ADJACENT
ADM	ADMINISTRATION
AF	AIR FLOW
AFF	ABOVE FINISH FLOOR
AH	AHEAD
AHU	AIR HANDLING UNIT
AL	ACTIVE LEAF
ALT	ALTERNATE, (IVE)
ALUM	ALUMINUM
AM	AMMETER
AMP	AMPERE
AND	ANODIZED
AP	ACCESS PANEL
APPR	APPROACH
APPROX	APPROXIMATE, (LY)
AR	ALARM RELAY
ARCH	ARCHITECTURAL
AS	AMMETER SWITCH
ASSY	ASSEMBLY
AUTO	AUTOMATIC
AUX	AUXILIARY
AVS	AUTOMATIC VALVE STATION
AWG	AMERICAN WIRE GAGE
B	BEAM
B TO B	BACK TO BACK
BA	BEARING AREA
BAL	BALANCE
BAT	BATTERY
BC	BEGIN CURVE
BD	BOARD
BEJ	BRICK EXPANSION JOINT
BF	BLIND FLANGE
BHP	BRAKE HORSEPOWER
BITUM	BITUMINOUS
BKR	BREAKER
BLDG	BUILDING
BLK	BLOCK
BM	BENCHMARK
BOF	BOTTOM OF FOOTING
BOT	BOTTOM
BP	BACK PRESSURE
BPMK NO	BASEPLATE MARK NUMBER
BRG	BEARING
BRK	BRICK
BS	BOTH SIDES
B&S	BELL AND SPIGOT
BSMT	BASEMENT
BTU	BRITISH THERMAL UNIT
BTUH	BRITISH THERMAL UNIT-HOUR
BU	BELL-UP
BUR	BUILT UP ROOFING
BVC	BEGIN VERTICAL CURVE
C	COUNTER
C TO C	CENTER TO CENTER
CB	CATCH BASIN
CD	CEILING DIFFUSER
C/EJ	CONTRACTION/EXPANSION JOINT
CFM	CUBIC FEET PER MINUTE
C&G	CURB AND GUTTER
CHKD	CHECKERED
CI	CAST IRON
CIMH	CAST IRON MANHOLE
CIMHS	CAST IRON MANHOLE STEPS
CIP	CAST IRON PIPE, CHEMICAL INJECTION PUMP
CISP	CAST IRON SOIL PIPE
CJT	CONTROL JOINT
CKT	CIRCUIT
CL	CLASS
C/L	CENTERLINE
CLG	CEILING
CLO	CLOSET
CLR	CLEAR, (ANCE)
CMP	CORRUGATED METAL PIPE
CMU	CONCRETE MASONRY UNIT
CO	CLEAN OUT, COMPANY
COD	CHEMICAL OXYGEN DEMAND
COL	COLUMN, COLLECTOR
COMB	COMBINATION
COMB SWR	COMBINED SEWER
COMP	COMPRESSOR, (ED)
CONC	CONCRETE
CONN	CONNECTION
CONST	CONSTRUCTION
CONT	CONTINUOUS, CONTINUATION, CONTROL
CONTR	CONTRACTOR
COR	CORNER
CORR	CORRIDOR, CORRUGATED
CP	CONTROL PANEL
CPLG	COUPLING
CPT	CONTROL POWER TRANSFORMER
CRS	COURSES, (ING)
CS	CONTROL SWITCH, CONTROL STATION, CUP SINK
CSK	COUNTERSUNK, (INK)
CT	CERAMIC TILE, CYCLE TIMER
CT	CURRENT TRANSFORMER
CTR(S)	CENTER(S)
CU	CUBIC
CU YD	CUBIC YARD
CW	COLD WATER

D	DOOR
DBL	DOUBLE
DC	DIRECT CURRENT
DEG	DEGREE
DEPT	DEPARTMENT
DET	DETAIL, DETECTOR
DFN	DRINKING FOUNTAIN
DH	DOOR HEIGHT
DI	DROP INLET, DUCTILE IRON
DIA	DIAMETER
DIF	DIFFUSER
DIM	DIMENSION
DIP	DUCTILE IRON PIPE, DIURNAL PUMP
DISCH	DISCHARGE
DISP	DISPENSER
DIST	DISTRIBUTION
DIV	DIVISION
DL	DEAD LOAD
DM	DAMPER MOTOR
DMJ	DOUBLE MECHANICAL JOINT
DN	DOWN
DO	DOOR OPENING, DISSOLVED OXYGEN
DPDT	DOUBLE POLE DOUBLE THROW
DR	DRAIN
DS	DOWNSPOUT
DT	DISTRIBUTION TRANSFORMER
DV	DRAIN VALVE
DWG(S)	DRAWING(S)
DWL(S)	DOWEL(S)
E	EAST, ELECTRICAL
EA	EACH
EAT	ENTERING AIR TEMPERATURE
EC	END CURVE
ECC	ECCENTRIC
ECC RED	ECCENTRIC REDUCER
EES	EYEWASH/EMERGENCY SHOWER
EEW	EMERGENCY EYEWASH
EF	EACH FACE
EFF	EFFLUENT
EJ	EXPANSION JOINT
EL	ELEVATION
ELB	ELBOW
ELEC	ELECTRIC, (AL)
ELV	ELEVATOR
EMER	EMERGENCY
ENC	ENCASEMENT
ENCL	ENCLOSURE
ENT	ENTRANCE
EOL	END OF LINE
EQ	EQUAL
EQP	EQUIPMENT
EW	EACH WAY
EW	EMERGENCY EYEWASH
EWEF	EACH WAY EACH FACE
EXCH	EXCHANGER
EXH	EXHAUST
EXIST	EXISTING
EXP	EXPANSION, EXPOSED
EXP JT	EXPANSION JOINT
EXT	EXTENSION, EXTERIOR, EXTERNAL, FIRE EXTINGUISHER
F TO F	FACE TO FACE
FAN	FAN
FB	FACE BRICK
FC	FLEXIBLE CONNECTION, FLOW CONTROL
FCA	FLANGED COUPLING ADAPTER
FD	FLOOR DRAIN
FDN	FOUNDATION
FDPR	FIRE DAMPER
FE	FIRE EXTINGUISHER
FEC	FIRE EXTINGUISHER CABINET
FHD	FLAT HEAD, FIRE HYDRANT
FHMS	FLAT HEAD MACHINE SCREW
FIG	FIGURE
FIN	FINISH
FIN GR	FINISH GRADE
FL	FLOOR, FLOW LINE
FLEX	FLEXIBLE
FLG	FLANGE, FLASHING
FM	FORCE MAIN
FO	FUEL OIL
FOB	FLAT ON BOTTOM
FOM	FACE OF MASONRY
FOS	FACE OF STUDS
FOT	FLAT ON TOP
FRP	FIBERGLASS REINFORCED PLASTIC
FS	FAR SIDE, FLOOR SLEEVE, FLOAT SWITCH
FT	FOOT
FTG	FOOTING
FURN	FURNISH, FURNISHED
FV	FLAP VALVE
FWD	FORWARD
G	GAS
GA	GAUGE
GAL	GALLON
GALV	GALVANIZED
GC/MS	GAS CHROMATOGRAPH/MASS SPECTROMETER
GEN	GENERAL, GENERATOR
GM	GAS METER
GPM	GALLONS PER MINUTE
GR	GRADE
GWB	GYPSUM WALLBOARD
GYP	GYPSUM
H	HIGH, HOUR, HYDROGEN, HAIKEY CREEK
HAU	HEAT AND A/C UNIT
HB	HOSE BIBB
HC	HOLLOW CORE
HDR	HEADER
HE	HEAT EXCHANGER
HEX	HEXAGONAL
HF	HOSE FAUCET
HGT	HEIGHT
HH	HANDHOLE
HLS	HIGH LEVEL SWITCH
HMC	HARNESSED MECHANICAL COUPLING
HMD	HOLLOW METAL DOOR
HMJ	HARNESSED MECHANICAL JOINT
HORIZ	HORIZONTAL
HP	HIGH POINT, HORSEPOWER
HR	HOUR, HANDRAIL
HS	HIGH STRENGTH
HV	HOSE VALVE
HVAC	HEATING,VENTILATING AND AIR CONDITIONING
HW	HOT WATER
HWY	HIGHWAY
HYDRO	HYDROPNEUMATIC

I	INDICATOR
ID	INSIDE DIAMETER
IF	INSIDE FACE
I/I	CURRENT TO CURRENT BOOSTER
IN	INCHES
INC	INCORPORATED
INCL	INCLUDING
INCR	INCREASE
INST	INSTRUMENT, (ATION)
INSUL	INSULATE, (ED), (ING)
INT	INTERIOR, INTERNAL
INV	INVERT
IPS	IRON PIPE SIZE
JAN	JANITOR
JB	JUNCTION BOX
JF	JOINT FILLER
JT	JOINT
K	KIPS
KIT	KITCHEN
KO	KNOCK OUT
KS	KITCHEN SINK
KV	KILOVOLT
KVA	KILOVOLT AMPERE
KW	KILOWATT
KWH	KILOWATT HOUR
L	LOWER BIRD CREEK
LAB	LABORATORY
LAM	LAMINATE(D)
LAT	LEAVING AIR TEMPERATURE
LAT	LATERAL
LAV	LAVATORY
LB(S)	POUNDS
LG	LENGTH, LONG
LH	LEFT HAND
LIN	LINEAL, LINEAR
LL	LIVE LOAD
LO	LOUVER OPENING
LS	LEVEL SWITCH
LT	LEFT, LAB TABLE
LVR	LOUVER
MA	MILLIAMPERE
MACH	MACHINE
MAN	MANUAL, MANOMETER
MAS	MASONRY
MAX	MAXIMUM
MB	MACHINE BOLT
MC	MECHANICAL COUPLING
MCC	MOTOR CONTROL CENTER
MECH	MECHANICAL
MED	MEDIUM
MET	METAL
MEZ	MEZZANINE
MFM	MAGNETIC FLOWMETER
MFR(S)	MANUFACTURER(S)
MG	MILLION GALLONS
MGD	MILLION GALLONS PER DAY
MIN	MINIMUM, MINUTE
MISC	MISCELLANEOUS
MJ	MECHANICAL JOINT
MJRG	MECHANICAL JOINT RETAINER GLAND
MJTR	MECHANICAL JOINT WITH TIE ROD
MNH	MANHOLE
MNT	MAINTENANCE
MO	MASONRY OPENING, MOTOR OPERATED
MP	METERING PUMP
MRD	METAL ROOF DECK
MS	MACHINE SCREW
MSL	MEAN SEA LEVEL
MTD	MOUNTED
MTL	MATERIAL
MTR	MOTOR, METER
N	NORTH, NORTHSIDE
N/A	NOT APPLICABLE
NBC	NAIL IN BOTTLE CAP
NC	NORMALLY CLOSED
NEUT	NEUTRAL
NF	NEAR FACE
N.O.	NORMALLY OPEN
NO.(S)	NUMBER(S)
NOM	NOMINAL
NORM	NORMAL
NPT	NATIONAL PIPE THREAD
NPW	NONPOTABLE WATER
NS	NEAR SIDE
NTS	NOT TO SCALE
OC	ON CENTER, ODOR CONTROL
OD	OUTSIDE DIAMETER
OF	OUTSIDE FACE, OVERFLOW
OH	OVERHEAD
OL	OVERLOAD
OPER	OPERATING
OPNG	OPENING
OPP	OPPOSITE
OSL	OUTSTANDING LEG
OZ	OUNCE
PC	POINT OF CURVE
PCC	POINT OF COMPOUND CURVATURE
PCCP	PRESTRESSED CONCRETE CYLINDER PIPE
PCP	PIER CUTOFF POINT
PD	PLAN DIMENSION
PE	PLAIN END
PG	PRESSURE GAUGE
PH	PIPE HANGER, PENTHOUSE
PI	POINT OF INTERSECTION
PIVC	POINT OF INTERSECTION ON VERTICAL CURVE
PL	PLATE
PLYWD	PLYWOOD
PNL	PANEL
POL	POLYMER
POT	POINT ON TANGENT
PP	POWER POLE
PR	PAIR
PROJ	PROJECTION
PRS	PRESSURE REDUCING STATION, PRESSURE SWITCH
PRV	POWER ROOF VENTILATOR
PS	PIPE SUPPORT
PSF	POUNDS PER SQUARE FOOT
PSI	POUNDS PER SQUARE INCH
PT	POINT, POINT OF TANGENCY
PVC	POLYVINYL CHLORIDE, POINT ON VERTICAL CURVE
PVCP	POLYVINYL CHLORIDE PIPE
PVMT	PAVEMENT
PW	POTABLE WATER

R	RADIUS, RISER
RAS	RETURN ACTIVATED SLUDGE
RCP	REINFORCED CONCRETE PIPE, RECIRCULATING PUMP
RCCP	REINFORCED CONCRETE CYLINDER PIPE
RCHEP	REINFORCED CONCRETE HORIZONTAL ELLIPTICAL PIPE
RD	ROOF DRAIN, ROAD
RDL	ROOF DRAIN LEADER
RDU	REDUCER, REDUCING
RECEP	RECEPTION
RECIRC	RECIRCULATING
RECP	RECEPTACLE
REG	REGULATOR, REGULATING
REF	REFERENCE
REFR	REFRIGERATION, REFRIGERATOR
REINF	REINFORCING
REM	REMOVABLE
REQD	REQUIRED
RET	RETURN
REV	REVISION, REVISED, REVERSED
RFG	ROOFING
RG	RETAINER GLAND
RH	ROOF HOOD, RIGHT HAND, ROUND HEAD, RED HEAD
RHMS	ROUND HEAD MACHINE SCREW
RHWS	ROUND HEAD WOOD SCREW
RM	ROOM
RO	ROUGH OPENING
RPM	REVOLUTIONS PER MINUTE
RR	RAILROAD
RS	RAW SLUDGE, RAW SEWAGE, ROLLED STEEL
RT	RIGHT
R/W	RIGHT OF WAY
S	SOUTH, SPEAKER, SOUTHSIDE
SAN SWR	SANITARY SEWER
SCHED	SCHEDULE
SD	STORM DRAIN, SOAP DISH
SEC	SECOND, SECURITY SYSTEM
SECT	SECTION
SER SK	SERVICE SINK
SG	SUPPLY GRILLE
SGT	SLUICE GATE
SH	SHEET
SHR	SHOWER
SHD	SHOWER DOOR
SIM	SIMILAR
SKL	SKYLIGHT
SM	SHEET METAL
SPA	SPACING, SPACES
SPEC(S)	SPECIFICATION(S)
SPLY	SUPPLY
SQ	SQUARE
SR	SUPPLY REGISTER
SS	STAINLESS STEEL
SS	SANITARY SEWER
SSK	SERVICE SINK
ST	SELF TAPPING
ST SWR	STORM SEWER
STA	STATION
STD	STANDARD
STL	STEEL
STOR	STORAGE
STR	STRUCTURAL
SUP	SUPPLY, SUMP PUMP
SUSP	SUSPENDED
SV	SHUTOFF VALVE
SW	SWITCH
SWBD	SWITCHBOARD
SWS	SEAL WATER SOLENOID
SWT	SWITCHGEAR
SYM	SYMMETRICAL
SYS	SYSTEM
T	THERMOSTAT, TREAD, TOTALIZER
T	TRANSFORMER, TELEPHONE, TOP
TAN	TANGENT
TB	TERMINAL BOX
T&B	TOP AND BOTTOM
TBE	THREAD BOTH ENDS
TBM	TEMPORARY BENCHMARK
TC	TOWEL CABINET, TOP OF CURB
TC	TERMINAL CABINET
TEL	TELESCOPING
TEMP	TEMPERATURE, TEMPORARY
TERM	TERMINAL
T&G	TONGUE & GROOVE
TH	TEST HOLE
THK	THICK, THICKNESS, THICKENERS, GRAVITY THICKENERS
THR	THRESHOLD
TI	TOTALIZING INDICATOR, TEMPERATURE INDICATOR
TIR	TOTALIZING INDICATING RECORDER
TOF	TOP OF FOOTING
TOM	TOP OF MASONRY
TOS	TOP OF STEEL
TP	TWISTED PAIR COUPLE, TOWEL PIN
TRANS	TRANSMITTER, TRANSFER
TRN	TRANSFORMER
TS	TEMPERATURE SWITCH
TV	TELEVISION
TYP	TYPICAL
UDM	ULTRASONIC DENSITY METER
UGND	UNDERGROUND
UH	UNIT HEATER
UNO	UNLESS NOTED OTHERWISE
UR	URINAL
USGS	UNITED STATES GEOLOGICAL SURVEY

V	VOLT, VENT
VAC	VACUUM
VAT	VINYL ASBESTOS TILE
VBF	VALVE, AWWA BUTTERFLY
VBI	VALVE, INDUSTRIAL BUTTERFLY
VBL	VALVE, BALL
VBM	VALVE, BALL MISCELLANEOUS
VC	VERTICAL CURVE, VICTAULIC COUPLING
VCD	VERTICAL CONTROL DAMPER
VCK	VALVE, CHECK
VCN	VALVE, CONE
VCP	VITRIFIED CLAY PIPE
VG	VALVE, GATE
VGD	VALVE, DOUBLE DISC GATE
VGL	VALVE, GLOBE
VERT	VERTICAL
VF	VACUUM FILTER
VIB	VIBRATION
VKG	VALVE, KNIFE GATE
VLV	VALVE
VM	VOLT METER
VNR	VENEER
VPC	VALVE, PRESSURE REGULATING
VPG	VALVE, PLUG
VPL	VALVE, ECCENTRIC PLUG
VPR	VALVE, PRESSURE REDUCING
VSP	VALVE, PRESSURE RELIEF
VSPV	VALVE, PRESSURE/VACUUM RELIEF
VSV	VALVE, VACUUM RELIEF
VV	VENT VALVE
VVB	VACUUM BREAKER
W	WEST, WIDE, WINDOW, WATT, WATER
W/	WITH
WAS	WASTE ACTIVATED SLUDGE
WB	WALLBOARD
WC	WATER CLOSET
WD	WOOD, WIDTH
WF	WALL FITTING
WH	WALL HYDRANT
WL	WATER LEVEL
WM	WATER METER, WATTMETER
WO	WINDOW OPENING
W/O	WITHOUT
WOM	WOMEN
WP	WATERPROOF, WORKING POINT
WR	WASTE RECEPTACLE
WS	WATERSTOP
WT	WEIGHT
WW	WETWELL
WWF	WELDED WIRE FABRIC
x	BY,TIMES
YH	YARD HYDRANT
&	AND
@	AT
<	DEFLECTION ANGLE
#	NUMBER
%	PER CENT

REGISTERED PROFESSIONAL ENGINEER
KURT ARLAN RONNEKAMP
17439
OKLAHOMA

REVISION	BY	DATE

LOWER BIRD CREEK WWTP EXPANSION
TMUA PROJECT NO. ES 2006-01
CONTRACT 1B

GENERAL
CIVIL
ABBREVIATIONS

CITY OF TULSA, OKLAHOMA
TULSA METROPOLITAN UTILITY AUTHORITY
ENGINEERING SERVICES DEPARTMENT

PLANS AND ESTIMATES PREPARED BY:

BLACK & VEATCH Building a world of difference. Black & Veatch Corporation Kansas City, Missouri

Holloway, Updike and Ballou Consulting Engineers Muskogee · Broken Arrow

DWGATES Engineering Services

PLAN SCALE:	DRAWN	JKS	APPROVED:
	DESIGNED	JMS	
	SURVEY		
PROFILE SCALE:	FIELD MGR.	TOB 10/11	
HORIZONTAL: 1" =	SECT. MGR.		
	PROJ. MGR.	PGV 10/3/11	
VERTICAL 1" =	RECOMMENDED: HKS 10/26/11		DIRECTOR
FILE:	DRAWING: GC-4		DATE 10/28/2011
ATLAS PAGE NO:			SHEET 5 OF 261 SHEETS

B&V PROJECT NO. 145120
JBS 9-28-11

PLOTTED DATE: 9/21/2011 5:05:14 PM, Batch Plot
SAVED DATE: SCH42738, 6/14/2011 3:54:31 PM
CYGNET ID: 145120-5000-C-B00005S1

FD145120
D145120SV

GENERAL LEGEND

- SURFACED STREET, ROAD OR DRIVE
- SURFACED STREET, ROAD OR DRIVE WITH CURBS
- NON-SURFACED STREET, ROAD OR DRIVE
- CONCRETE WALK
- CB — CATCH BASIN
- MANHOLE
- DRAINAGE COURSE OR FLOW LINE
- 326 — EXISTING GROUND CONTOUR
- 326 — FINISH GRADE CONTOUR
- BANK OR SLOPE LINES
- #3 OR T.H.#3 B3 — TEST HOLE AND NUMBER
- SURVEY LINE WITH PI, PT, OR POT
- CONCRETE ENCASEMENT-PLAN
- CONCRETE REACTION BLOCKING AT BEND, PLUG OR TEE
- DRAINS OR CULVERTS
- TUNNEL CASING - PLAN
- SMALLER THAN 24" / 24" AND LARGER — EXISTING
- GENERAL LAYOUT YARD PIPING
- SMALLER THAN 24" / 24" AND LARGER — NEW
- NEW WATER LINE OR SEWER IN PROFILE
- NON-CONNECTING PIPING
- CE/L — CONSTRUCTION EASEMENT LINE
- E/L — EASEMENT LINE
- R/W — RIGHT-OF-WAY LINE
- PL — PROPERTY LINE
- PE/L — PERMANENT EASEMENT LINE
- TE/L — TEMPORARY EASEMENT LINE
- UE/L — UTILITY EASEMENT LINE
- S/L — SURVEY LINE / SECTION LINE
- W — WATER LINE
- G — GAS LINE
- T — TELEPHONE (UNDERGROUND)
- E — ELECTRICAL (UNDERGROUND)
- P — T — POWER OR TELEPHONE LINES (OVERHEAD)
- (G) (W) — WATER OR GAS VALVE
- (WM) (GM) — WATER OR GAS METER
- TELEPHONE OR POWER POLE WITH GUY ANCHOR
- FIRE HYDRANT
- YARD HYDRANT
- STREET LIGHT POLE
- TRAFFIC SIGNAL
- TRAFFIC SIGN
- STOPSIGN
- HEDGE, BRUSH, SHRUBS, WOODS
- 10" — DECIDUOUS TREE AND TRUNK DIAMETER
- 4" — CONIFEROUS TREE AND TRUNK DIAMETER
- SWAMP

- BUILDINGS, STRUCTURES
- STRUCTURES UNDERGROUND
- FUTURE BUILDINGS, STRUCTURES
- CLOTHES LINE
- SWING SET
- FENCE
- FENCE, WOOD
- RAILROAD, EACH TRACK
- CENTERLINE
- 1 / AC45 — SECTION NUMBER OR DETAIL LETTER; DRAWING NUMBER ON WHICH SECTION OR DETAIL APPEARS; OR WHERE SECTION IS CUT OR DETAIL IS NOTED
- 1 / A045 — DOOR, WINDOW AND LOUVER SCHEDULE REFERENCE; WALL ELEVATION
- D / 4 — ABBREVIATION; SCHEDULE NUMBER
- F102 — ROOM NUMBER; AREA DESIGNATION
- PV / 10 — EQUIPMENT OR VALVE IDENTIFICATION CODE; EQUIPMENT NUMBER
- PV-10 — EQUIPMENT OR VALVE IDENTIFICATION CODE; EQUIPMENT NUMBER
- EQUIP CALLOUT — EQUIPMENT REPRESENTATION WITH CALLOUT
- EXISTING FACILITY TO BE DEMOLISHED OR REMOVED

PIPING SYSTEMS

NEW PIPING	CDWR	CONDENSER WATER RETURN	HWR	HEATING SYSTEM WATER RETURN	NPW	WATER, NON-POTABLE
UNDERGROUND PIPING	CDWS	CONDENSER WATER SUPPLY	HWS	HEATING SYSTEM WATER SUPPLY	NPHW	WATER, NON-POTABLE HOT
EXISTING PIPING	Co2(G)	CARBON DIOXIDE GAS	HW	WATER, POTABLE HOT	OX	OXYGEN
FUTURE PIPING	Co2(S)	CARBON DIOXIDE SOLUTION	HWC	HOT WATER CIRCULATING	OZ	OZONE
AIR (COMPRESSED)	CW	WATER, COLD	IA	INSTRUMENT AIR	OF	OVERFLOW
ALUMINUM SULFATE - (ALUM)	DW	DISTILLED WATER	PERM	POTASSIUM PERMANGANATE	POLY	POLYMER SOLUTION
ARGON	FeCl	FERRIC CHLORIDE	LIME	LIME	RF	REFRIGERANT
CHEMICAL RESISTANT ACID WASTE	FeS	FERRIC SULFATE	PG	LP GAS (PROPANE)	ST	STORM DRAIN
CHEMICAL RESISTANT ACID WASTE VENT	F	FIRE PROTECTION WATER SYSTEM	N	NITROGEN	SG	SLUDGE GAS
TEMPERED OR BLENDED WATER	FL	FLUORIDE	SA	SODA ASH	SI	SILICA
CARBON SLURRY	FOR	FUEL OIL RETURN	NaOH	SODIUM HYDROXIDE	PD	SUMP PUMP DISCHARGE
ACETYLENE	FOS	FUEL OIL SUPPLY	SP	SODIUM HEXAMETAPHOSPHATE (PHOSPHATE)	SAN	SANITARY SEWER
CHILLED WATER RETURN	FOV	FUEL OIL VENT	NaOCL	SODIUM HYPOCHLORITE	V	VENT
CHILLED WATER SUPPLY	G	GAS, NATURAL	AMM(G)	AMMONIA GAS	VAC	VACUUM
CHLORINE GAS	H	HYDROGEN	AMM(S)	AMMONIA SOLUTION	W	WATER
CHLORINE LIQUID	HE	HELIUM	NO	NITROUS OXIDE		
CHLORINE SOLUTION	HP	HYDROGEN PEROXIDE				
	PA	PHOSPHORIC ACID				

PIPING ACCESSORIES LEGEND

- BLIND FLANGE
- CAP OR PLUG
- CO — CLEANOUT
- CROSS
- DIAPHRAGM SEAL
- ELBOW
- ELBOW DOWN
- ELBOW TURNING UP
- SIZE — HOSE CONNECTION
- Q — QUICK COUPLING
- REDUCER
- RUPTURE DISK
- TEE
- TEE LINE DOWN
- TEE LINE UP
- WYE
- S — WYE STRAINER
- S — WYE STRAINER WITH BLOWOFF
- DRAIN OR BELL-UP
- CALIBRATING COLUMN
- TRAP
- UNION
- WALL SLEEVE
- AT — AUTOMATIC DRAIN TRAP
- DT — DRIP TRAP
- S S — DUPLEX STRAINER
- EXPANSION COMPENSATOR
- F — INLINE FILTER
- FLEXIBLE HOSE OR TUBING
- FLEXIBLE CONNECTOR
- HOSE REEL
- INJECTOR, EDUCTOR, BLENDER
- ORIFICE PLATE
- PIPE GUIDE
- S — SEDIMENT TRAP
- S — STRAINER
- SUCTION DIFFUSER
- SURGE CHAMBER
- VENT - SCREENED
- VENT
- P — PRESSURE GAUGE W/SNUBBER
- T — TEMPERATURE INDICATOR
- THERMOMETER
- ELECTROMAGNETIC/ULTRASONIC FLOWMETER
- PITOT TUBE
- ROTAMETER
- TURBINE OR PROPELLOR FLOWMETER
- M — SET STOP METER
- VENTURI
- FM — FLOW METER
- PIPE DIFFUSER

MISCELLANEOUS EQUIPMENT

- STATIC MIXER
- VERTICAL MIXER
- SIGHT GLASS
- CENTRIFUGE
- CHANNEL DIFFUSER
- COMPRESSOR OR BLOWER
- PIPE ANCHOR
- PUMP
- SLUICE GATE
- SLIDE GATE
- STOP PLATE
- BAR SCREEN
- EXPANSION TANK
- SCREW (LIFT) PUMP
- FLUME
- WEIR

ACTUATOR LEGEND

- E — ELECTRIC
- FLOAT
- DIAPHRAGM
- P/O — AIR/OIL TANDEM
- S — SOLENOID
- A — AIR

NOTES:

1. SYMBOLS ON THIS SHEET WHICH ARE TO BE SHOWN AS EXISTING SHALL BE DELINEATED AS SCREENED:
2. THOSE SYMBOLS WHICH ARE TO BE SHOWN AS NEW SHALL BE DELINEATED AS SOLID (HEAVY):
3. NOT ALL INFORMATION SHOWN ON THIS SHEET APPLIES TO THIS PROJECT.

MATERIALS LEGEND

- EARTH OR GRADE
- GRANULAR FILL (CRUSHED ROCK OR GRAVEL)
- ROCK
- NEW CONCRETE
- EXISTING CONCRETE, PRECAST OR PRESTRESSED CONCRETE
- BRICK, FACE
- BRICK, COMMON
- CONCRETE MASONRY UNITS (CMU)
- CUT STONE OR SAND FILL, GROUT, MORTAR, AND PLASTER
- WOOD, SHEATHING, PANELING, DECKING, ETC.
- WOOD, STUDS, BEAMS, JOISTS, ETC.
- RIPRAP
- CHECKERED PLATE
- STEEL (FOR 1"SCALE & LARGER)
- STEEL OR ALUMINUM (FOR 3/4" SCALE & SMALLER)
- BAR GRATING (LINES IN DIRECTION OF SPAN)
- ALUMINUM
- INSULATION (BATT)
- INSULATION (RIGID)

VALVE LEGEND

- PINCH VALVE
- PLUG VALVE, ECCENTRIC
- PLUG VALVE, NON-ECCENTRIC
- BUTTERFLY VALVE
- GATE VALVE
- BALL VALVE
- GLOBE VALVE
- CHECK VALVE
- 3 WAY VALVE
- 4 WAY VALVE
- PRESSURE VACUUM RELIEF VALVE
- ANGLE VALVE
- CHLORINE INSTITUTE VALVE
- DIAPHRAGM VALVE
- THROTTLING VALVE
- FLAME ARRESTER OR CHECK
- BACKWATER VALVE
- INLINE PRESSURE RELIEF VALVE
- PRESSURE REGULATING VALVE
- PRESSURE SUSTAINING OR MAINTAINING VALVE
- VACUUM BREAKER
- V — VACUUM RELIEF CHECK VALVE
- THERMAL SHUTOFF VALVE
- EXPLOSION RELIEF VALVE
- HOSE FAUCET
- HOSE FAUCET W/VACUUM BREAKER
- HOSE VALVE W/HOSE NIPPLE
- BACKFLOW PREVENTER
- SAFETY RELIEF VALVE

REGISTERED PROFESSIONAL ENGINEER — KURT ARDAN RONNEKAMP — 17439 — OKLAHOMA — 10/28/11

REVISION	BY	DATE

LOWER BIRD CREEK WWTP EXPANSION
TMUA PROJECT NO. ES 2006-01
CONTRACT 1B

GENERAL
CIVIL
LEGENDS

CITY OF TULSA, OKLAHOMA
TULSA METROPOLITAN UTILITY AUTHORITY
ENGINEERING SERVICES DEPARTMENT

PLANS AND ESTIMATES PREPARED BY:

BLACK & VEATCH Building a world of difference. — Black & Veatch Corporation, Kansas City, Missouri
Holloway, Updike and Bellon, Consulting Engineers, Muskogee · Broken Arrow
DWGATES Engineering Services

PLAN SCALE:	DRAWN	JKS	APPROVED:
	DESIGNED	JMS	
	SURVEY		
PROFILE SCALE:	FIELD MGR.	TCB 10/11	
HORIZONTAL: 1" =	SECT. MGR.		
	PROJ. MGR.	TBV 10/3/11	
VERTICAL 1" =	RECOMMENDED: HAB 10/26/11		DIRECTOR
FILE:	DRAWING: GC-5		DATE 10/28/2011
ATLAS PAGE NO:			SHEET 6 OF 261 SHEETS

B&V PROJECT NO. 145120
JMS 9-28-11

PLOTTED DATE: 9/21/2011 5:05:31 PM, Batch Plot
SAVED DATE: 9/21/2011 5:05:25 PM
CYCLE ID: 145120-3000-C-G00005G.DP

FD145120
D145120BV

PERMIT LIMITS, FLOWS, AND LOADS

CURRENT PERMIT REQUIREMENTS

Rated Flow	
Monthly Average, MGD	Monitor/Report
Daily Maximum, MGD	Monitor/Report
Frequency	Daily
Sample Type	Totalize
Carbonaceous Biochemical Oxygen Demand (CBOD5)	
Year Round	
Monthly Average, lb/day	250.2
Monthly Average, mg/L	15
Weekly Average, mg/L	22.5
Frequency	1/month
Sample Type	6-hr composite
Total Suspended Solids (TSS)	
Year Round	
Monthly Average, lb/day	500.4
Monthly Average, mg/L	30
Weekly Average, mg/L	45
Frequency	1/week
Sample Type	6-hr composite
Ammonia	
June to October	
Monthly Average, lb/day	116.8
Monthly Average, mg/L	7
Weekly Average, mg/L	10.5
November to May	
Monthly Average, lb/day	133.4
Monthly Average, mg/L	8
Weekly Average, mg/L	12
Frequency	1/month
Sample Type	6-hr composite
Dissolved Oxygen	
June to October	
Minimum, mg/L	5
November to May	
Minimum, mg/L	7
Frequency	Daily
Sample Type	Grab
Fecal Coliform	
May to September	
Monthly Geometric Mean, Colonies/100 ML	200
Daily Maximum, Colonies/100 ML	400
Frequency	2/month
Sample Type	Grab
Total Residual Chlorine	
Year Round	
Concentration, mg/L	< 0.1
Frequency	Daily
Sample Type	Grab
pH	
Range	6.5 - 9.0
Frequency	Daily
Sample Type	Grab
4,4'-DDD	
Monthly Average, µg/L	Monitor/Report
Frequency	1/month
Sample Type	6-hr composite

ANTICIPATED FUTURE PERMIT REQUIREMENTS

Rated Flow (AA), MGD	15
Carbonaceous Biochemical Oxygen Demand ($CBOD_5$), mg/L	
Summer	10
Winter	15
Spring	15
Ammonia Nitrogen (NH_3-N), mg/L as N	
Summer	3
Winter	8
Spring	8
Dissolved Oxygen, mg/L	
Summer	5
Winter	6
Spring	5
Total Suspended Solids (TSS), mg/L	
Summer	15
Winter	20
Spring	20

FLOW PROJECTIONS

Flow, MGD	
Start-up	0.5
Diurnal Low	1.6
Annual Average	4.0
Maximum Month	4.0
Peak Day	8.0

DESIGN WASTEWATER FLOWS AND LOADINGS

	Annual Average	Maximum Month	Peak Day
BOD_5, ppd	6,660	7,300	9,800
BOD_5, mg/L	198	220	172
TSS, ppd	7,200	7,900	-
TSS, mg/L	216	237	-
NH_3-N, ppd	650	730	1,000
NH_3-N, mg/L	19.4	22.1	17.6
TKN, ppd	1,000	1,100	1,600
TKN, mg/L	30.2	34.5	-
TP, ppd	190	190	-
TP, mg/L	5.7	5.7	-

FLOOD ELEVATIONS

	Elevation
25-Year Flood	566.0
100-Year Flood	574.0

MECHANICAL TREATMENT FACILITY

HEADWORKS BUILDING

Screening

Type	Slotted or Laced
Number of Units	2
Channel Width, in	36
Effective Opening, in	1/4
Screen Inclination, deg	75
Start-up Flow, MGD	0.5
Low Diurnal Flow, MGD	1.6
Design Flow, MGD	4.0
Peak Flow MGD	8.0
Motor, HP, each	2 (chain drive) 2 (cleaning brush drive)

Washer/Compactor

Number of Units	2
Minimum Screw Diameter	-
Minimum Capacity - batch, cf/hr	50
Minimum Capacity - continuous, cf/hr	50
Minimum Motor, HP, each	5

Screening Quantities

Flow (Annual Average), MGD	4
Range of Screening Quantities, cf/day	24 - 60
Typical Screening Quantity, cf/day	40
Flow (Peak Day), MGD	8
Range of Screening Quantities, cf/day	48 - 120
Typical Screening Quantity, cf/day	80

Grit Basin (Eutek Headcells)

Type	Hydraulic Induced Vortex
Number of Units	2
Tray Diameter, ft	9
Number of Trays, each basin	5
Design Flow, MGD, each basin	4
Peak Flow, MGD, each basin	7.5
95% Particle Removal	>150 Micron

Grit Pumps

Type	Horizontal, End-Suction, Recessed Impeller Centrifugal
Number of Units	2
Rated Total Head, ft	40
Capacity at Rated Head, gpm	200
Motor, HP, each	5
Drive Type	Constant Speed

Grit Separator/Concentrator (Slurrycup)

Type	Cyclone
Number of Units	2
Design Capacity, gpm	200
Diameter, in	24

Grit Classifier (Grit Snail)

Type	Dewatering Escalator
Number of Units	2
Belt Width, in	-
Grit Capacity, cy/hr	1
Motor, HP, each	1/3

Grit Quantities

Flow (Annual Average), MGD	4
Range of Grit Quantities, cf/day	2 - 20
Flow (Peak Day), MGD	8
Range of Grit Quantities, cf/day	4 - 40

Odor Control Equipment

Type	Carbon Absortion Units
Number of Units	2
Type of Bed	Single
Type of Carbon	Water Regenerable, High Capacity
Diameter, ft	8,14
Height, ft	8.75,12
Fans	
Type	Fiberglass Centrifugal
Number	2
Motor, HP	5,15

OXIDATION DITCH

Brush Aerators

Type	Rotor
Number of Units	2
Length, ft	30
Average DO, mg/L	2
Maximum Month Summer DO, mg/L	1.6
Peak Summer DO, mg/L	0.4
Drive Type	Adjustable Frequency
Motor, HP, each	75

FINAL CLARIFIER

Final Clarifier No.1

Type	Circular, Concrete, Spiral Scraper, with EDI, and Rotating Weir Scum Skimmers
Number of Units	1
Flow	
Annual Average, MGD	4.0
Maximum Month, MGD	4.0
Peak Day, MGD	8.0
Diameter, ft	100
Sidewater Depth, ft	19
Bottom Slope, in/in	1:12
Hydraulic Loading (1):	
Maximum Month, gpd/sf	510
Peak Day, gpd/sf	970
Solids Loading Rate:	
Maximum Month, ppd/sf	24
Peak Day, ppd/sf	35

(1) Does not include recycle flows.

Scum Pumps

Type	Submersible Wastewater
Number of Units	2
Rated Total Head, ft	15
Capacity at Rated Head, gpm	200
Motor, HP, each	5
Drive Type	Constant Speed

RAS PUMP STATION

Return Activated Sludge (RAS) / Waste Activated Sludge (WAS) Pumps

Type	Non-clog, Horizontal, End-suction Centrifugal
Number of Units:	
Existing	1
Replacement	1
New	1
Total	3
Replacement and New Pumps:	
Rated Total Head, ft	49
Capacity of Rated Head, gpm	1400
Motor, HP, each	30
Drive Type	Adjustable Frequency

Plant Effluent/Non-potable Water System Pumps

Type	End-Suction Direct Coupled or Vertical Multi-Stagle
Number of Units	4
Rated Total Head, ft	185
Capacity at Rated Head, gpm	250
Motor, HP, each	20
Drive Type	Adjustable Frequency

DISINFECTION

Type	Chlorination
Chemical Concentration	10% NaOCl
Minimum Design Dosage, mg/L as Cl2	10
Peak Design Dosage, mg/L as Cl2	20

SLUDGE TRANSFER PUMP STATION

Sludge Transfer Pumps

~~Type~~	~~Multi-stage Progressive Cavity~~
~~Number of Units~~	~~2~~
~~Rated Total Head, ft~~	~~200~~
~~Capacity at Rated Head, gpm~~	~~310~~
~~Motor, HP, each~~	~~100~~
~~Drive Type~~	~~Adjustable Frequency~~

1

SLUDGE TRANSFER PUMPS
TYPE MULTISTAGE PROGRESSIVE CAVITY
NUMBER OF UNITS 2
RATED TOTAL HEAD FT 200
CAPACITY AT RATED HEAD, GPM 310
MOTOR, HP, EACH 100
DRIVE TYPE ADJUSTABLE FREQUENCY

PORT SOUTH PUMP STATION

Type	Submersible Wastewater
Number of Units	2
Rated Total Head, ft	65
Capacity at Rated Head, gpm	700
Motor, HP, each	20
Drive Type	Adjustable Frequency

REGISTERED PROFESSIONAL ENGINEER
KURT ARLAN RONNEKAMP
17439
9/23/11
OKLAHOMA

REVISION	BY	DATE
Addendum No. 1	PSB	1-6-12

LOWER BIRD CREEK WWTP EXPANSION
TMUA PROJECT NO. ES 2006-01
CONTRACT 1B

GENERAL
CIVIL
PROCESS DESIGN PARAMETERS

CITY OF TULSA, OKLAHOMA
TULSA METROPOLITAN UTILITY AUTHORITY
ENGINEERING SERVICES DEPARTMENT

PLANS AND ESTIMATES PREPARED BY:

BLACK & VEATCH Building a world of difference. Black & Veatch Corporation Kansas City, Missouri
Holloway, Updike and Bellon Consulting Engineers Muskogee · Broken Arrow
BOWGATES Engineering Services

PLAN SCALE:	DRAWN	JKS		APPROVED:
	DESIGNED	JMS		
	SURVEY			
PROFILE SCALE:	FIELD MGR.	TDS	10/11	
HORIZONTAL: 1" =	SECT. MGR.			
	PROJ. MGR.	PSB	10/5/11	
VERTICAL 1" =	RECOMMENDED: HAI 10/26/11			DIRECTOR
FILE:	DRAWING: GC-6			DATE 10/28/2011
ATLAS PAGE NO:				SHEET 7 OF 261 SHEETS

B&V PROJECT NO. 145120
PSB 9-28-11

PLOTTED DATE: 9/21/2011 5:06:29 PM, Batch Plot
SAVED DATE: 9/20/2011 1:21:59 PM
CAD FILE: D:\145120-2006-ES-01\GC6.DWG
FD145120
D145120SV

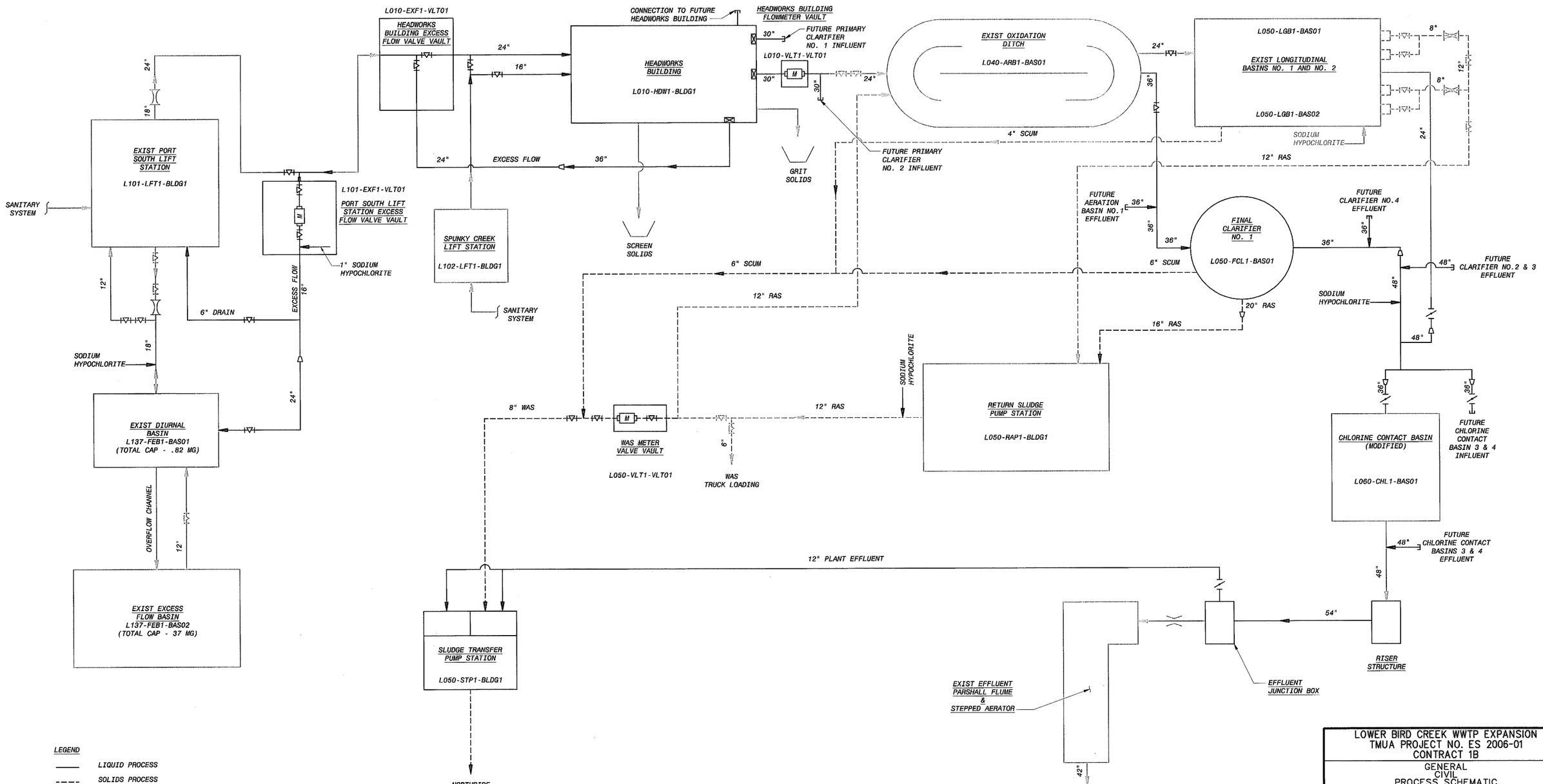

LEGEND

——— LIQUID PROCESS

- - - - SOLIDS PROCESS

NOTES:

1. SYMBOLS DESCRIBED IN LEGENDS AND ABBREVIATIONS FOR CIVIL AND P&ID.
2. P&IDS SHOW VALVES, PROCESSES, AND EQUIPMENT INSIDE BUILDING STRUCTURES.

LOWER BIRD CREEK WWTP EXPANSION
TMUA PROJECT NO. ES 2006-01
CONTRACT 1B

GENERAL
CIVIL
PROCESS SCHEMATIC

CITY OF TULSA, OKLAHOMA
TULSA METROPOLITAN UTILITY AUTHORITY
ENGINEERING SERVICES DEPARTMENT

PLANS AND ESTIMATES PREPARED BY:

BLACK & VEATCH Building a world of difference. Black & Veatch Corporation Kansas City, Missouri

Holloway, Updike and Bellen Consulting Engineers Muskogee - Broken Arrow

D.W. GATES Engineering Services

REGISTERED PROFESSIONAL ENGINEER KURT ARLAN RONNEKAMP 17439 OKLAHOMA

REVISION	BY	DATE

PLAN SCALE:	DRAWN	JKS		APPROVED:
	DESIGNED	JMS		
	SURVEY			
PROFILE SCALE:	FIELD MGR.	TOS	10/11	
	SECT. MGR.			
HORIZONTAL: 1" =	PROJ. MGR.	RBW	10/3/11	
	RECOMMENDED:	HAS	10/24/11	DIRECTOR
VERTICAL 1" =				
FILE:	DRAWING: GC-7			DATE 10/28/2011
ATLAS PAGE NO:				SHEET 8 OF 261 SHEETS

B&V PROJECT NO. 145120
9-28-11

PLOTTED DATE: 9/21/2011 5:07:09 PM, Batch Plot
SAVED DATE: 9/20/2011 10:39:46 AM
CYGNET ID: 145120-3000-C-RG000SGCD

FD145120
D145120BV

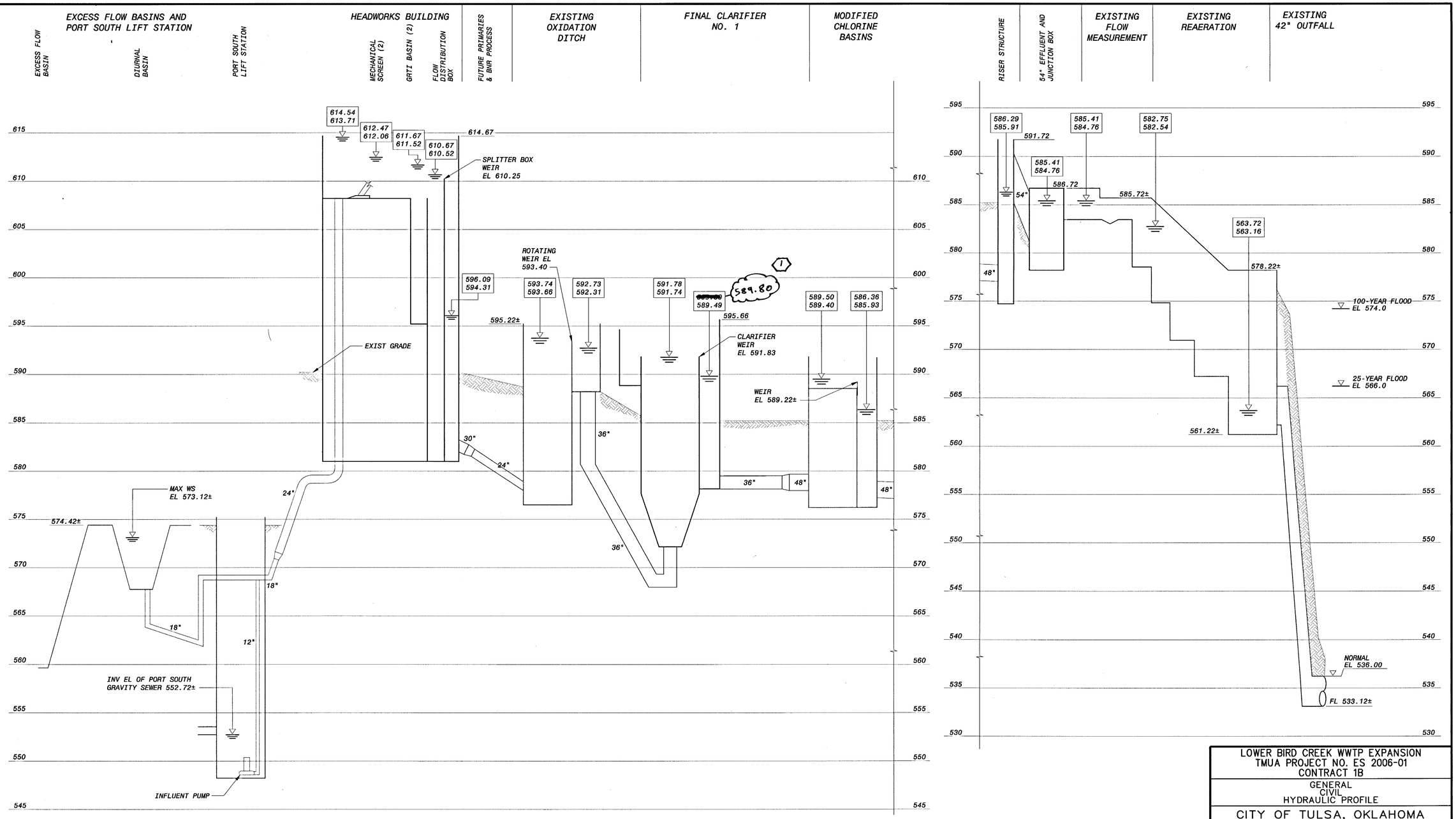

HYDRAULIC PROFILE

HORIZ: NO SCALE
VERT : 1" = 5'-0"

LEGEND

611.15	- DESIGN PEAK (8.0 MGD)
609.98	- ANNUAL AVERAGE (4.0 MGD)

NOTES:

1. WATER SURFACE ELEVATIONS SHOWN ARE BASED ON DESIGN PEAK HYDRAULIC FLOWS.
2. HYDRAULIC CALCULATIONS WERE COMPLETED FOR LBCWWTP. PORT SOUTH IS SHOWN FOR EXCESS FLOW.
3. DOWNSTREAM AND UPSTREAM WATER SURFACE ELEVATIONS ARE FOR A CLEAN SCREEN.

LOWER BIRD CREEK WWTP EXPANSION
TMUA PROJECT NO. ES 2006-01
CONTRACT 1B

GENERAL
CIVIL
HYDRAULIC PROFILE

CITY OF TULSA, OKLAHOMA
TULSA METROPOLITAN UTILITY AUTHORITY
ENGINEERING SERVICES DEPARTMENT

PLANS AND ESTIMATES PREPARED BY:

BLACK & VEATCH Building a world of difference. Black & Veatch Corporation Kansas City, Missouri
Holloway, Updike and Bellen Consulting Engineers Muskogee · Broken Arrow
DOWGATES Engineering Services

REGISTERED PROFESSIONAL ENGINEER KURT ARLAN RONNEKAMP 17439 OKLAHOMA

REVISION	BY	DATE
Addendum No. 1	PSB	1-6-12

PLAN SCALE:	DRAWN	JKS		APPROVED:
	DESIGNED	CAC	LAC,JMS	
	SURVEY			
PROFILE SCALE:	FIELD MGR.	JB	10/17	
HORIZONTAL: 1" =	SECT. MGR.			
	PROJ. MGR.	PBV	10/3/11	
VERTICAL 1" =	RECOMMENDED: HAS 10/26/11			DIRECTOR
FILE:	DRAWING: GC-8			DATE 10/28/2011
ATLAS PAGE NO:				SHEET 9 OF 261 SHEETS

JGB 9-28-11 B&V PROJECT NO. 132886

PLOTTED DATE: 9/21/2011 5:07:28 PM, Batch Plot
FILE SIZE DATE 594/208 (KA/20/4.45:19 PM
CYGNET ID: 145120-3000-C-B0000S.WH

FD145120
D145120BV

CODE CLASSIFICATION TABLE

PROJECT INFORMATION (PE input)

Owner:	Tulsa Metropolitan Utility Authority
Plant:	Lower Bird Creek WWTP Expansion
Location:	Tulsa, OK
B&V Project:	TMUA Project No. ES 2006-01: B&V Project 145120
Dates	
Design:	September 23, 2011
Construction:	TBD

CODE REFERENCES (PE input)

Building Code:	2006 IBC - International Building Code
Mechanical Code:	2003 IMC - International Mechanical Code 2003
Plumbing Code:	2003 IPC – International Plumbing Code 2003
Fire Code:	2006 IFC - International Fire Code 2006
Electrical Code:	2005 NEC – National Electrical Code
Energy Code:	2006 IBC - reference International Energy Conservation Code

Other:
National Fire Protection Association NFPA 820 Fire Protection in Wastewater Treatment and Collection Facilities
City Charter as applicable to the Accessibility Code: ICC/ANSI A117.1 and Americans with Disabilities Act ADAAG

Date: September 23, 2011
Completed by:

Project Engr:	Kurt Ronnekamp
Civil:	HUB-Steve Tolar
Architect:	Phil Rishel
Chemical Feed:	Dan Gay
Mechanical (Building Systems):	Tim Dawson
Mechanical (Process):	David Banning
Electrical:	Scott Stockham

Base Information (See Project Workflow Model DD-S1-11) | Complete in DD-S1-11, Update near end of Spacial Design L2

STRUCTURE, ROOM OR AREA Name	Room No	NFPA 820 Table, Row, & Line	NFPA 820 Fire Protect Measures	Occup Class	Type of Cons't	Area Allowed	Area sq ft	Occup Load	ADA Access	Exits Reqd	Exits Actual	Building Height Allowed	Building Height Actual	Stories	Grade Location	Hazard Class	Sprinkler Type	Density/Area (Note 1)	Smoke Detection	Cont/Int	Rate	Odor Control	FIRE CODE REQUIREMENTS	ELECTRICAL CODE Class	Group	Division
Headworks Building				F-2	II-B	23,000	6,855	69	No	2	5	55	46	2	Above											
Lower Level							3,705		No	1	3					---	---	---	---	Int	6 AC/HR	No		--	--	--
Stair	H001	-	-				198		No	1	1					---	---	---	---	Int	12 AC/HR	Yes	X	--	--	--
Grit Loading Room	H002	-	-				1,207		No	1	2					---	---	---	Note 1	Int	---	No		--	--	--
Electrical Room	H003	-	-				271		No	1	1					---	---	---	---	Int	Note 1	No	X	--	--	--
Grit Pump Room	H004	6.2.2	H, FE, FAS				1,452		No	1	2					---	---	---	---	Cont	Note 2	No		--	--	--
Restroom	H005	-	-				74		No	1	1					---	---	---	---					--	--	--
Mezzanine	H008						503		No	1	1													--	--	--
Upper Level							3,180		No	1	1					---	---	---	---	Int	6 AC/HR	No		--	--	--
Walkway	H102	-	-				41		No	1	1					---	---	---	---	Cont	12 AC/HR	Yes	X	1	D	II
Screen Room	H104	5.2.1b	FE, H, CGD				1,489		No	1	2					---	---	---	---	Int	Note 1	No	X	--	--	--
Dewatering Room	H103	6.2.2	H, FE, FAS				1,448		No	1	2					---	---	---	---					--	--	--
Stair	H101						202		No	1	1					---	---	---	---	N/A	N/A	N/A		1	D	II
Effluent Metering Vault	-	4.2.36a	NR													---	---	---	---	N/A	N/A	N/A		1	D	II
Excess Flow Vault	-	4.2.31a	NR																							
Sludge Transfer Pump Station				F-2	II-B	23,000	1,767	18	No	1	1	55	19.33	1	Above	---	---	---	---	Int	Note 1	No	X	--	--	--
Pump Room	T102	5.2.19	H				1,560		No	1	1					---	---	---	Note 1	Int	---	No		--	--	--
Electrical Room	T101	-	-				207		No	1	2					---	---	---	---	Cont	Note 2	No		--	--	--
Operations Building				B	II-B	23,000	2,849	28	Yes	2	2	55	14	1	Above	---	---	---	---					--	--	--
Public Waiting Area	A101	-	-				150		Yes	1	1					---	---	---	---					--	--	--
Open Office Area	A102	-	-				339		Yes	1	1					---	---	---	---				X	--	--	--
Hallway	A103	-	-				378		Yes	1	2					---	---	---	---					--	--	--
Office	A104	-	-				184		Yes	1	1					---	---	---	---					--	--	--
Office and Control Room	A105	-	-				185		Yes	1	1					---	---	---	---					--	--	--
Men's Locker Room	A106	-	-				122		Yes	1	1					---	---	---	---					--	--	--
Men's Restroom	A107	-	-				145		Yes	1	1					---	---	---	---					--	--	--
Women's Restroom	A108	-	-				146		Yes	1	1					---	---	---	---					--	--	--
Women's Locker Room	A109	-	-				93		Yes	1	1					---	---	---	---					--	--	--
Janitor's Closet	A110	-	-				40		Yes	1	1					---	---	---	---					--	--	--
Mechanical Room	A111	-	-				201		Yes	1	1					---	---	---	---					--	--	--
Electrical Room	A112	-	-				108		Yes	1	1					---	---	---	---					--	--	--
Storage	A113	-	-				97		Yes	1	1					---	---	---	---					--	--	--
Lunch Room	A114	-	-				246		Yes	1	1					---	---	---	---					--	--	--
Sample Room	A115	-	-				169		Yes	1	2					---	---	---	---				X	--	--	--
Operations Laboratory	A116	-	-				246		Yes	1	1					---	---	---	---					--	--	--
Return Sludge Pump Station																---	---	---	---	Int	Note 3	No		--	--	--
Control Room	-	-	-																					--	--	--
Pump Room	-	5.2.19	H																					--	--	--
Break Room	-	-	-																					--	--	--
Storage Room	-	-	-																					--	--	--
Toilet and Locker Room	-	-	-																					--	--	--
Office	-	-	-																					--	--	--
Port South Lift Station																---	---	---	---	Int	Note 3	No		--	--	--
Control Room	-	-	-																					1	D	I
Wetwell	-	4.2.16a	CGD																					--	--	--
Equipment Room	-	-	-																							
WAS Metering Vault																				N/A				1	D	I
WAS Metering Vault	-	4.2.37a	NR																							
Final Clarifier No. 1																				N/A				1	D	II
Final Clarifier No. 1 Basin	-	5.2.8c	NR																					1	D	II
Scum Wetwell	-	6.2.5c	NR																							
Oxidation Ditch																				N/A				1	D	II
Oxidation Ditch	-	5.2.8c	NR																							
Chemical Feed Facility (Pre-Fabricated FRP Enclosure)				F-2	V-B	13,000	184	2	No	1	2	40	10	1	Above	---	---	---	---	Int	Note 2	No		--	--	--
Chemical Feed Area	-	-	-																							

exempt amount	secondary contain	cont. ventilation	vent shutoff switches	fire sprinkler system	sprinkler control	standby power	emergency power	limit controls	alarm annunciator	alarm supervision	treatment system	access controlled	gas detection	breathing apparatus	smoke detection	liquid level sensor	liquid tight const	fire extinguishers	smoke and heat vents

NOTES

ABBREVIATIONS

AC/HR	Air Changes per Hour	NL	Not Limited
Cfm	Cubic Feet Per Minute	OH	Ordinary Hazard Group
Cont	Continuous	PH	Physical Hazard
Gal	Gallons	Sqft	Square Feet
GPM	Gallons per Minute		
HE	Health Hazard		
Int	Intermittent		
Lbs	Pounds		
N/A	Not Applicable		

NFPA 820
CGD = Combustible Gas Detectors
FDS = Fire Detection System
FAS = Fire Alarm System
FE = Portable Fire Extinguishers
FSS = Fire Suppression System
H = Hydrant Protection
NR=No Requirement

Building Code

Fire Protection
1. Duct mounted smoke detection and automatic air distribution system shutdown will be provided for return air systems exceeding 2000 cfm, unless the system is incapable of spreading smoke beyond the room where it is generated.
Duct mounted smoke detectors will not be furnished where area smoke detection is provided.

Ventilation
1. The ventilation rate will be 6 ac/hr or as required to remove internal equipment heat gains, whichever is greater.
2. The ventilation rate will be based on the requirements of ASHRAE 62.
3. The existing HVAC systems will be modified as required to accommodate additional heat load from new equipment installed.

Fire Code Requirements

Electrical Code Requirements

Remarks

REGISTERED PROFESSIONAL ENGINEER
KURT ARLAN RONNEKAMP
17439
OKLAHOMA

REVISION	BY	DATE

LOWER BIRD CREEK WWTP EXPANSION
TMUA PROJECT NO. ES 2006-01
CONTRACT 1B

GENERAL
CIVIL/ARCHITECTURAL
CODE CLASSIFICATION TABLE

CITY OF TULSA, OKLAHOMA
TULSA METROPOLITAN UTILITY AUTHORITY
ENGINEERING SERVICES DEPARTMENT

PLANS AND ESTIMATES PREPARED BY:
BLACK & VEATCH Building a world of difference
Black & Veatch Corporation Kansas City, Missouri
Holloway, Upchurch and Ballou Consulting Engineers Muskogee · Broken Arrow
DOWGATES Engineering Services

PLAN SCALE:	DRAWN	JKS	
	DESIGNED	JMS	
	SURVEY		
PROFILE SCALE:	FIELD MGR.	TOS	10/11
HORIZONTAL: 1" =	SECT. MGR.		
	PROJ. MGR.	RJW	10/31/11
VERTICAL 1" =	RECOMMENDED:	HAS	10/26/11

APPROVED:
DIRECTOR

FILE: DRAWING: GC-9
DATE 10/28/2011
ATLAS PAGE NO:
SHEET 10 OF 261 SHEETS

JMS 9-28-11 B&V PROJECT NO. 145120

PLOTTED DATE: 9/21/2011 5:07:50 PM, Batch Plot
SAVED DATE: SCH42738, 8/15/2011 11:35:18 AM
CYGNET ID: 145120-30000-C-B00005.DWG

FD145120
D145120BV

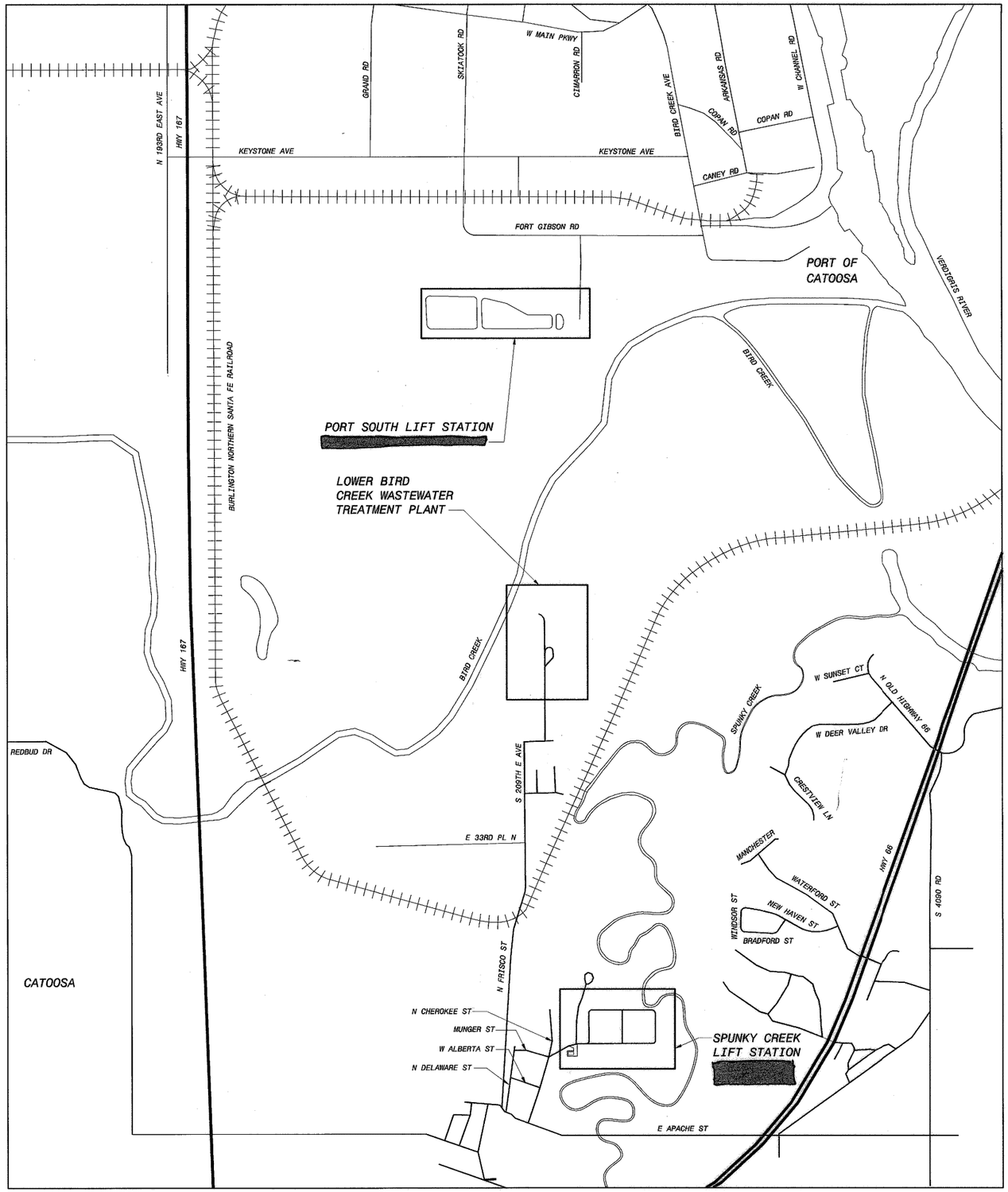

LOCATION MAP
NO SCALE

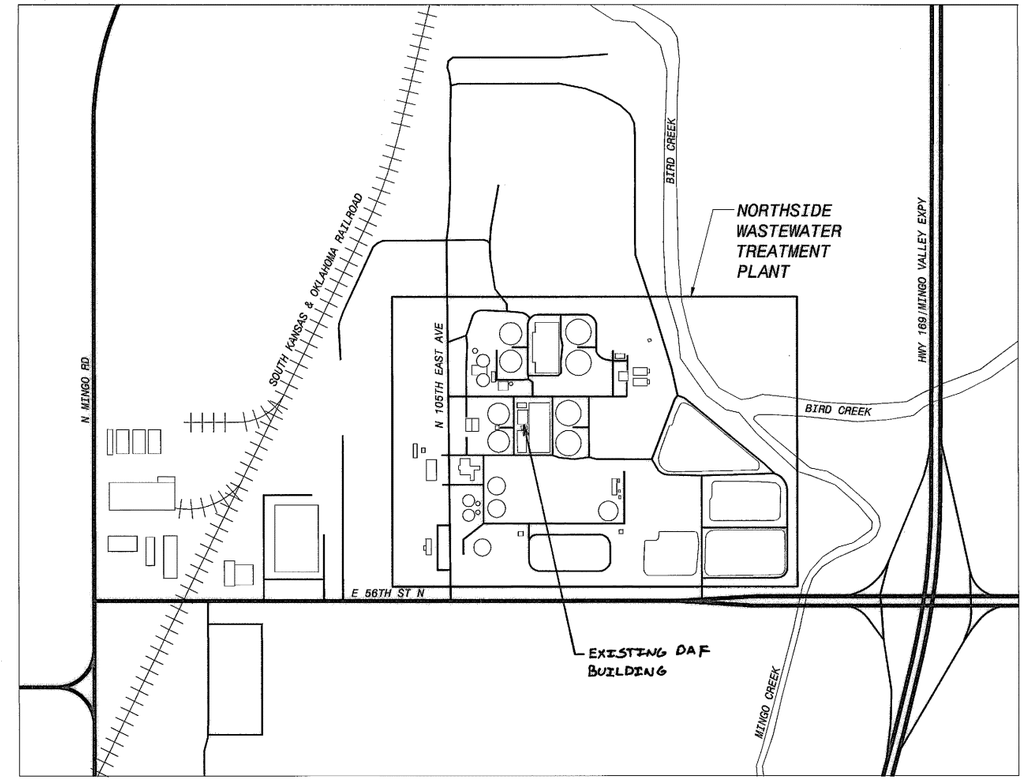

LOCATION MAP
NO SCALE

LOWER BIRD CREEK WWTP EXPANSION
TMUA PROJECT NO. ES 2006-01
CONTRACT 1B

GENERAL
CIVIL
PROJECT LOCATION MAP

CITY OF TULSA, OKLAHOMA
TULSA METROPOLITAN UTILITY AUTHORITY
ENGINEERING SERVICES DEPARTMENT

PLANS AND ESTIMATES PREPARED BY:

BLACK & VEATCH Building a world of difference
Black & Veatch Corporation
Kansas City, Missouri

Holloway, Updike and Bellon
Consulting Engineers
Muskogee · Broken Arrow

DWGATES Engineering Services

REGISTERED PROFESSIONAL ENGINEER
KURT ARDAN RONNEKAMP
17439
OKLAHOMA

REVISION	BY	DATE

PLAN SCALE:	DRAWN	JKS	APPROVED:
	DESIGNED	JMS	
	SURVEY		
PROFILE SCALE:	FIELD MGR.	JD 10/1/11	
HORIZONTAL: 1" =	SECT. MGR.		
	PROJ. MGR.	RBV 10/3/11	
VERTICAL 1" =	RECOMMENDED: HBS 10/28/11		DIRECTOR
FILE:	DRAWING: GC-10		DATE 10/28/2011
ATLAS PAGE NO:			SHEET 11 OF 261 SHEETS

JBS 9-25-11 B&V PROJECT NO. 145120

PLOTTED DATE: 9/21/2011 5:58:39 PM, Batch Plot:
LAYER DATE: 9/20/2011 5:49:05 PM, 9/21/2011 5:52:52 AM
CYGNET ID: 145120-3000-C-B0000SG6K

FD145120
D145120BV

ABBREVIATIONS

A	ALARM, COMPRESSED AIR OUTLET
AC	AIR COMPRESSOR
AD	ACCESS DOOR, AIR DRYER
AF	AIR FLOW, AIRFOIL
AFD	ADJUSTABLE FREQUENCY DRIVE
AFF	ABOVE FINISH FLOOR
AFM	AIR FLOW MONITOR
AHU	AIR HANDLING UNIT
ALUM	ALUMINUM
AP	ACCESS PANEL
APPROX	APPROXIMATE
AR	AIR RECEIVER
AS	AIR SEPARATOR
ATU	AIR TERMINAL UNIT
AUTO	AUTOMATIC
AVG	AVERAGE
AVS	AUTOMATIC VALVE STATION
B	BELT DRIVE, BLOW THROUGH
BDD	BACKDRAFT DAMPER
BF	BLIND FLANGE
BFF	BELOW FINISH FLOOR
BFP	BACKFLOW PREVENTER
BH	BASEBOARD HEATER
BI	BACKWARD INCLINED, BUILT-IN THERMOSTAT
BL	BOTTOM LEVEL
BLDG	BUILDING
BLR	BLOWER
BOD	BOTTOM OF DUCT ELEVATION
BOT	BOTTOM
BTF	BIOTRICKLING FILTER
BTUH	BRITISH THERMAL UNITS PER HOUR
BU	BELL-UP
BV	BALL VALVE
C	CHANNEL, CONVECTOR, COOLING, COOLING (MAKE ON RISE)
CAU	CARBON ADSORPTION UNIT
CB	CENTRIFUGAL BLOWER
CBD	COUNTERBALANCE BACKDRAFT DAMPER
CC	COOLING COIL
CCU	CARBON CANISTER UNIT
CD	CONTROL DAMPER
CDWP	CONDENSER WATER PUMP
CENTR	CENTRIFUGAL
CF	CABINET FAN
CFM	CUBIC FEET PER MINUTE
CH	CONVECTION HEATER
C/L	CENTERLINE
CO	CLEANOUT
CONC	CONCRETE
CONN	CONNECTION
CONT	CONTINUATION
CP	CIRCULATING PUMP
CS	CUP SINK
CT	COOLING TOWER
CU	CONDENSING UNIT
CV	CHECK VALVE, CONTROL VALVE
CWP	CHILLED WATER PUMP
CWW	CLEAR WATER WASTE
D	DIRECT DRIVE, DRAW-THRU
DB	DRY BULB
DDC	DIRECT DIGITAL CONTROL
DEH	DEHUMIDIFIER
DF	DRINKING FOUNTAIN, DUCT FAN
DIA	DIAMETER
DM	DUCT MOUNTED
DN	DOWN
DSN	DOWNSPOUT NOZZLE
DX	DIRECT EXPANSION
E	ELECTRIC, ELECTRIC OPERATOR, EXHAUST
EA	EACH, EXHAUST AIR
EAT	ENTERING AIR TEMPERATURE
EC	ECONOMIZER, EVAPORATIVE COOLER
ECH	ELECTRIC CABINET HEATER
ECP	EQUIPMENT CONTROL PANEL
EDH	ELECTRIC DUCT HEATER
EEW	EMERGENCY EYE WASH
EF	EXHAUST FAN
EFF	EFFICIENCY
EGS	EMERGENCY GAS SCRUBBER
EIH	ELECTRIC INFRARED HEATER
EL	ELEVATION
EP	EXPLOSION PROOF
EQUIP	EQUIPMENT
ES	EMERGENCY SHOWER, EMERGENCY SWITCH
ES/EEW	EMERGENCY SHOWER AND EYEWASH
ESP	EXTERNAL STATIC PRESSURE
ET	EXPANSION TANK
EUH	ELECTRIC UNIT HEATER
EV	EXHAUST VALVE
EVS	EMERGENCY VENTILATION SWITCH
EWC	ELECTRIC WATER COOLER
EWH	ELECTRIC WATER HEATER
EWT	ENTERING WATER TEMPERATURE
EXIST	EXISTING
F	DEGREES FAHRENHEIT
FA	FOUL AIR
FBD	FACE AND BYPASS DAMPER
FC	FORWARD CURVE
FCO	FLOOR CLEANOUT
FCU	FAN COIL UNIT
FD	FIRE DAMPER, FLOOR DRAIN
FDB	DEGREES FAHRENHEIT DRY BULB
FEF	FUME EXHAUST FAN
FLEX	FLEXIBLE
FM	FLOW METER
FPM	FEET PER MINUTE
FR	FUNNEL RECEPTOR
FRP	FIBERGLASS REINFORCED PLASTIC PIPE
FS	FLOOR SINK, FLOW SWITCH
FSD	COMBINATION FIRE/SMOKE DAMPER
FSW	FILTER SURFACE WASH
FT	FEET, FIN TUBE HEATER, FLOW TUBE
FUR	FURNACE
FWB	DEGREES FAHRENHEIT WET BULB
G	GAS OUTLET
GA	GAUGE
GALV	GALVANIZED
GCO	GRADE CLEANOUT
GD	GARBAGE DISPOSER
GIH	GAS INFRARED HEATER
GPM	GALLONS PER MINUTE
GUH	GAS UNIT HEATER
GV	GATE VALVE
GW	GLASS WASHER
GWH	GAS WATER HEATER
H	HAND OPERATOR, HEATING, HEATING (MAKE ON FALL), HEIGHT, HORIZONTAL, HUMIDISTAT
HC	HEATING COIL
HCH	HEATING WATER CABINET HEATER
HE	HEAT EXCHANGER, HELIUM
HF	HOSE FAUCET
HO	HAND-OFF
HOA	HAND-OFF-AUTO
HP	HEAT PUMP, HORSEPOWER
HR	HEAT RECOVERY UNIT, HOUR, HOSE REEL
HUH	HEATING WATER UNIT HEATER
HUM	HUMIDIFIER
HV	HOSE VALVE
HWB	HEATING WATER BOILER
HWP	HEATING WATER PUMP
HZ	HERTZ
I	INTAKE
ID	INSIDE DIAMETER
IN	INCHES
INV	INVERT
JS	JANITOR'S SINK
KS	KITCHEN SINK
KW	KILOWATT
L	LINED DUCT, LOUVER
LAT	LEAVING AIR TEMPERATURE
LAV	LAVATORY
LBS	POUNDS
LD	COMBINATION LOUVER/DAMPER
LI	LEVEL INDICATOR
LS	LABORATORY SINK, LEVEL SWITCH
LWT	LEAVING WATER TEMPERATURE
MAU	MAKEUP AIR UNIT
MAX	MAXIMUM
MCA	MINIMUM CIRCUIT AMPS
ME	MIST ELIMINATOR
MFR	MANUFACTURER
MOCP	MAXIMUM OVERCURRENT PROTECTION
MIN	MINIMUM
MOD	MODULATING
MS	MOP SINK
NC	NORMALLY CLOSED
NO	NORMALLY OPEN, NUMBER
NPSHR	NET POSITIVE SUCTION HEAD REQUIRED
NT	NEUTRALIZATION TANK
OA	OUTSIDE AIR
OC	ODOR CONTROL
OCBD	ODOR CONTROL BALANCE DAMPER
OCF	ODOR CONTROL FAN
OCFS	ODOR CONTROL FLOW SWITCH
OCLS	ODOR CONTROL LEVEL SWITCH
OCP	ODOR CONTROL PANEL
OCPS	ODOR CONTROL PRESSURE SWITCH
OCS	ODOR CONTROL SCRUBBER
OCSD	ODOR CONTROL SHUTOFF DAMPER
OD	OUTSIDE DIAMETER
ORD	OVERFLOW ROOF DRAIN
ORP	OXIDATION REDUCTION POTENTIAL
P	PNEUMATIC
PD	PRESSURE DROP (INCHES OF WATER FOR AIR, FEET OF WATER FOR FLUIDS)
PAC	PACKAGED AIR CONDITIONING UNIT
PAH	PACKAGED AIR HANDLING UNIT
PDI	PLUMBING AND DRAINAGE INSTITUTE
PDS	PRESSURE DIFFERENTIAL SWITCH
PF	PROPELLER FAN
PHP	PACKAGED HEAT PUMP
PL	PLATE
POS	POSITION
PPM	PARTS PER MILLION
PROP	PROPELLER
PRS	PRESSURE REDUCING STATION
PRV	POWER ROOF VENTILATOR, PRESSURE REDUCING VALVE
PS	PRESSURE SWITCH
PSI	POUNDS PER SQUARE INCH
PSIA	POUNDS PER SQUARE INCH ABSOLUTE
PSIG	POUNDS PER SQUARE INCH GAUGE
PTAC	PACKAGED TERMINAL AIR CONDITIONER
RA	REACTIVATION AIR, RETURN AIR
RAC	ROOM AIR CONDITIONER
RCS	REMOTE CONTROL STATION
RD	ROOF DRAIN
REQD	REQUIRED
RH	RELATIVE HUMIDITY, ROOF HOOD
RSF	ROOF SUPPLY FAN
SA	SUPPLY AIR
SCD	SMOKE CONTROL DAMPER
SCFM	STANDARD CUBIC FEET PER MINUTE
SCP	SCRUBBER CONTROL PANEL
SF	SQUARE FEET, SUPPLY FAN
SH	SHEET, SHOWER
SIM	SIMILAR
SMD	SMOKE DETECTOR
SP	STATIC PRESSURE (INCHES OF WATER)
SPS	STATIC PRESSURE SENSOR
SRP	SCRUBBER RECIRCULATION PUMP
SS	STAINLESS STEEL
SSK	SERVICE SINK
SSP	SUBMERSIBLE SUMP PUMP
STD	STANDARD
SV	SERVICE VALVE, SHUTOFF VALVE, SUPPLY VALVE, SOLENOID VALVE
T	THERMOSTAT
TCP	TEMPERATURE CONTROL PANEL
TCV	TEMPERATURE CONTROL VALVE
TD	TRENCH DRAIN
TE	TEMPERATURE ELEMENT
TL	TOP LEVEL
TP	TRAP PRIMER
TS	TIP SPEED, TAMPER SWITCH
TYP	TYPICAL
UR	URINAL
V	VERTICAL
VAC	VACUUM OUTLET
VANE	VANEAXIAL
VAV	VARIABLE AIR VOLUME
VB	VACUUM BREAKER
VCD	VOLUME CONTROL DAMPER
VF	VANEAXIAL FAN
VP	VACUUM PUMP
VSP	VERTICAL COLUMN SUMP PUMP
VTR	VENT THRU ROOF
W	WIDE FLANGE, WIDTH
WB	WET BULB
WBP	WATER BOOSTER PUMP
WC	WATER CHILLER, WATER CLOSET
	WATER COLUMN
WCO	WALL CLEANOUT
WF	WALL FAN
WG	WATER GAUGE
WH	WALL HEATER, WALL HYDRANT
WHA	WATER HAMMER ARRESTOR
WM	WALL MOUNTED
WST	WATER STORAGE TANK
WT	WEIGHT
WV	WATER CONTROL VALVE
ZD	ZONE DAMPER

LEGEND

GENERAL

- PIPING ABOVE FLOOR OR GRADE
- PIPING BELOW FLOOR OR GRADE
- PIPE TURNING UP
- PIPE TURNING DOWN

WATER

- NPW — COLD WATER (NONPOTABLE)
- CW — COLD WATER (POTABLE)
- DE — DEIONIZED WATER
- DW — DISTILLED WATER
- F — FIRE PROTECTION WATER
- HWC — HOT WATER CIRCULATING (POTABLE)
- NPHW — HOT WATER (NONPOTABLE)
- HW — HOT WATER (POTABLE)
- PEW — PLANT EFFLUENT WATER
- SVW — SERVICE WATER
- SW — SOFTENED WATER
- TW — TEMPERED OR BLENDED WATER
- TNPW — TEMPERED NONPOTABLE WATER

WASTE

- CRW — CHEMICAL RESISTANT WASTE
- CRV — CHEMICAL RESISTANT VENT
- CWW — CLEAR WATER WASTE
- D — INDIRECT DRAIN
- SAN — SANITARY DRAIN
- ST — STORM DRAIN
- PD — SUMP PUMP DISCHARGE
- V — VENT

SPECIAL

- ACET — ACETYLENE
- AR — ARGON
- A — COMPRESSED AIR
- HE — HELIUM
- H — HYDROGEN
- ME — METHANE
- N — NITROGEN
- NO — NITROUS OXIDE
- OX — OXYGEN
- VAC — VACUUM

FUEL GAS

- G — NATURAL GAS
- PG — PROPANE GAS

HVAC/ODOR CONTROL

- CWR — CHILLED WATER RETURN
- CWS — CHILLED WATER SUPPLY
- C — CONDENSATE DRAIN
- CDWR — CONDENSER WATER RETURN
- CDWS — CONDENSER WATER SUPPLY
- FA — FOUL AIR
- HWR — HEATING WATER RETURN
- HWS — HEATING WATER SUPPLY
- LPC — LOW PRESSURE CONDENSATE
- LPS — LOW PRESSURE STEAM (<15 PSIG)
- R — REFRIGERANT
- SR — SCRUBBER RECIRCULATION

VALVES

- ANGLE VALVE
- BACKFLOW PREVENTER (2" & SMALLER)
- BACKFLOW PREVENTER
- BACKWATER VALVE
- BALL VALVE
- BUTTERFLY VALVE
- CHECK VALVE
- GATE VALVE
- GLOBE VALVE
- PLUG VALVE
- PRESSURE REDUCING VALVE
- THREE WAY VALVE

PIPE FITTINGS

- BLIND FLANGE
- CAP
- REDUCER
- SLEEVE
- TP — TEST PLUG
- UNION
- P-TRAP
- VENT THROUGH ROOF (VTR)

PIPING SPECIALTIES

- AUTOMATIC VALVE STATION
- S — BASKET STRAINER
- COMBINATION PUMP DISCHARGE VALVE
- FLEXIBLE CONNECTION
- FLOW CONTROL VALVE
- FLOW SENSOR METER
- HF — HOSE FAUCET
- HF — HOSE FAUCET W/ VACUUM BREAKER
- HOSE VALVE W/ HOSE NIPPLE
- AIR VENT
- PRS — PRESSURE REDUCING STATION
- PRESSURE RELIEF VALVE
- PRESSURE/TEMPERATURE RELIEF VALVE
- Q — QUICK COUPLING
- ROTAMETER
- SIGHT FLOW INDICATOR
- SUCTION DIFFUSER (SCHEMATIC)
- TP — TRAP PRIMER
- WH — WALL HYDRANT W/ VACUUM BREAKER
- M — METER
- S — WYE STRAINER
- S — WYE STRAINER W/ BLOWOFF
- VACUUM BREAKER

PLUMBING (SCHEMATIC)

- AIR-GAP FITTING
- BELL-UP DRAIN OR FUNNEL RECEPTOR
- FLOOR CLEANOUT
- FLOOR DRAIN
- FLOOR DRAIN W/ FUNNEL

FIRE PROTECTION

- ALARM CHECK VALVE - WET SYSTEM
- DRY PIPE VALVE
- FIRE DEPARTMENT CONNECTION
- TS — SUPERVISORY (TAMPER) SWITCH

PLUMBING

- BELL-UP DRAIN OR FUNNEL RECEPTOR W/ TRAP
- FCO — CLEANOUT (FLOOR)
- CO — CLEANOUT (PIPE)
- HW / CW — BLENDING VALVE
- DOWNSPOUT NOZZLE OR SHOWER
- EMERGENCY SHOWER/EYEWASH
- FLOOR DRAIN
- HOSE RACK
- HOSE REEL
- P-TRAP
- ROOF DRAIN
- SPLASHBLOCK
- A — WATER HAMMER ARRESTOR W/ PDI SIZE DESIGNATION

HVAC

- DIFFUSER FOR FLEXIBLE DUCT
- 30"x20"(L) — DUCTWORK DIMENSIONS, THE FIRST DIMENSION IS THE SIDE SEEN OR SIDE THE LEADER LINE TOUCHES. SEE GENERAL MECHANICAL NOTES.
- FLEXIBLE CONNECTION
- FLEXIBLE DUCTWORK
- XX — INCLINED RISE (UP) OR DROP (DN) IN RESPECT TO DIRECTION OF AIRFLOW
- NEGATIVE PRESSURE DUCT
- POSITIVE PRESSURE DUCT
- REGISTER, GRILLE OR DIFFUSER
- ROUND OR FLEXIBLE DUCT TAKEOFF
- ROUND TO SQUARE TRANSITION
- TURNING VANES

CONTROLS AND INSTRUMENTATION

- DIAL TYPE THERMOMETER
- DG — DRAFT GAUGE
- E — ELECTRIC OPERATOR (EXPLOSION PROOF)
- E — ELECTRIC OPERATOR (MODULATING)
- E — ELECTRIC OPERATOR (2 POSITION)
- EVS 1 — EMERGENCY VENTILATION SWITCH W/ NUMBER
- FS — FLOW SWITCH
- GAUGE ACTIVATOR/ISOLATOR
- H 1 — HUMIDISTAT W/ NUMBER
- I — INSTRUMENT TEST OPENING
- LS — LEVEL SWITCH
- PDS 1 — PRESSURE DIFFERENTIAL SWITCH W/ NUMBER
- P — PRESSURE GAUGE W/ SHUTOFF VALVE
- PS — PRESSURE SWITCH
- SMD 1 — SMOKE DETECTOR W/ NUMBER
- S — SOLENOID OPERATOR
- STEM TYPE THERMOMETER
- TS — TEMPERATURE SENSOR
- T 1 — THERMOSTAT WITH NUMBER
- V — VACUUM GAUGE W/ SHUTOFF VALVE

AIR INLET AND OUTLET IDENTIFICATION

24"x10"-10"
SR-1-760

- SIZE-LENGTH BY WIDTH (INCHES)
- FLEXIBLE DUCT DIAMETER (INCHES, IF USED)
- CFM THRU DEVICE
- DEVICE DESIGNATION
- DEVICE GROUP: R-REGISTER, G-GRILLE, D-DIFFUSER
- DEVICE TYPE: S-SUPPLY, E-EXHAUST, R-RETURN, T-TRANSFER

GENERAL MECHANICAL NOTES

1. THIS IS GENERAL LEGEND AND ABBREVIATION SHEET FOR PLUMBING, HVAC AND ODOR CONTROL DRAWINGS. SOME ITEMS CONTAINED ON THIS SHEET MAY NOT BE USED ON THIS SPECIFIC PROJECT.
2. FOR ROOFTOP EQUIPMENT CURBS, FLUES, AND FLASHING DETAILS, SEE ARCHITECTURAL DRAWINGS.
3. SEE ARCHITECTURAL AND STRUCTURAL DRAWINGS FOR ALL EQUIPMENT BASE DETAILS.
4. "SCREENED" DELINEATION DENOTES EXISTING AND NEW FACILITIES AND IS FOR REFERENCE ONLY. "LIGHT" LINE DELINEATION DENOTES EXISTING MECHANICAL EQUIPMENT AND SYSTEMS. EXISTING FACILITY AND MECHANICAL SYSTEMS INFORMATION WAS TAKEN FROM PREVIOUS DRAWINGS, CONSTRUCTION RECORDS, DATA, AND FIELD SURVEY INFORMATION. ACTUAL LOCATION, ARRANGEMENT, AND DIMENSIONS SHALL BE FIELD VERIFIED AND WORK INSTALLED TO MEET ACTUAL CONDITIONS AND LOCATIONS ENCOUNTERED. "BOLD" (DARK) DELINEATION IS NEW WORK TO BE CONSTRUCTED UNDER THIS CONTRACT.
5. ALL MATERIALS, FITTINGS, COVERS, AND EQUIPMENT INSTALLED IN RETURN AIR PLENUMS SHALL BE NONCOMBUSTIBLE AND UL LISTED FOR USE IN RETURN AIR PLENUMS.
6. ALL PIPE AND DUCT PENETRATIONS THROUGH FIRE RESISTANCE RATED ASSEMBLIES SHALL BE PROVIDED WITH FIRESTOP SYSTEMS, EQUIPMENT AND ACCESSORIES TO RESIST THE PASSAGE OF FIRE, SMOKE AND OTHER GASES. THE ORIGINAL FIRE RESISTANCE RATING OF THE ASSEMBLY PENETRATED SHALL BE MAINTAINED FOR ALL TYPES OF PENETRATIONS. SEE ARCHITECTURAL DRAWINGS FOR RATED ASSEMBLY LOCATIONS.
7. METAL ROOF DECKING OR BOTTOM CHORD OF BAR JOISTS SHALL NOT BE USED FOR THE SUPPORT OF EQUIPMENT, PIPING, OR DUCTWORK.
8. ALL HANGERS, BRACKETS, OR BRACES FOR DUCTWORK, EQUIPMENT, AND PIPING ARE NOT INDICATED ON THE DRAWINGS. REFER TO THE SPECIFICATIONS FOR SUPPORT REQUIREMENTS NOT SHOWN ON THE PLANS.
9. OUTSIDE AIR INLETS SHALL BE LOCATED A MINIMUM OF 10' AWAY FROM ANY EXHAUST AIR OR PLUMBING VENT OUTLET.
10. ALL EQUIPMENT, PIPING, AND DUCTWORK SHALL BE ROUTED TO AVOID INTERFERENCES WITH STRUCTURE, OTHER PIPING, EQUIPMENT, DUCTWORK, AND CONDUIT. UNLESS SPECIFICALLY DIMENSIONED, THE PIPE AND DUCTWORK ROUTING SHOWN IS INTENDED TO INDICATE GENERAL LOCATION ONLY. INSTALL DUCTWORK TO ALLOW FOR PIPING TO BE ROUTED NEAR WALLS.
11. ALL PIPING AND DUCTWORK SHALL BE ROUTED AS HIGH AS POSSIBLE WITH A MINIMUM HEIGHT OF 8'-0" ABOVE FINISHED FLOOR UNLESS OTHERWISE INDICATED BY ACENTERLINE, INVERT, OR BOTTOM OF DUCT ELEVATION.
12. PIPING AND DUCTWORK INSTALLED ABOVE SUSPENDED CEILINGS SHALL BE INSTALLED TO ALLOW A MINIMUM 8 INCH CLEARANCE BETWEEN THE CEILING AND PIPING OR BOTTOM OF THE DUCT.
13. ALL HOSE FAUCETS AND HOSE VALVES SHALL BE INSTALLED 3'-0" ABOVE FINISHED FLOOR UNLESS OTHERWISE NOTED. WALL HYDRANTS SHALL BE INSTALLED 2'-0" ABOVE GRADE UNLESS OTHERWISE NOTED.
14. ALL HOSE FAUCETS AND WALL HYDRANTS SHALL BE NOMINAL 3/4" PIPE SIZE UNLESS OTHERWISE NOTED. ALL HOSE VALVES SHALL BE 1 1/2" NOMINAL PIPE SIZE UNLESS OTHERWISE NOTED.
15. ALL HOSE FAUCETS, WALL HYDRANTS, AND OTHER OUTLETS ON NONPOTABLE WATER LINES WHICH COULD BE USED FOR DRINKING OR DOMESTIC USE SHALL BE POSTED AS REQUIRED BY THE APPLICABLE CODES. IN ABSENCE OF A CODE REQUIREMENT, THE OUTLETS SHALL BE POSTED WITH A TAG IN THE SHAPE OF A 4" EQUILATERAL TRIANGLE BEARING THE LEGEND "DANGER: UNSAFE WATER" IN LETTERS NOT LESS THAN 1/2" IN HEIGHT. THIS TAG SHALL BE SECURELY ATTACHED IN A VISIBLE LOCATION DIRECTLY ABOVE OUTLET. THE TAG SHALL BE PAINTED ORANGE AND THE LETTERS BLACK.
16. DUCTWORK SHALL BE FABRICATED, REINFORCED, SUPPORTED AND SEALED FOR OPERATING PRESSURES INDICATED IN THE SCHEDULES FOR THE EQUIPMENT IT SERVES. ALL DUCTWORK SHALL HAVE A MINIMUM SMACNA PRESSURE CLASSIFICATION OF ONE INCH.
17. DUCT SIZES INDICATED ARE CLEAR DIMENSIONS INSIDE THE DUCT OR DUCT LINING. SHEET METAL SIZES ARE LARGER FOR INTERNALLY LINED DUCTWORK.
18. MINIMUM INSULATION THICKNESSES FOR DUCTWORK SHALL BE AS INDICATED IN THE SPECIFICATIONS UNLESS OTHERWISE INDICATED ON THE PLANS WITH A "L" OR "W" DESIGNATION. WHERE AN INSULATION THICKNESS IS INDICATED ON THE DRAWINGS, IT SHALL GOVERN. THE FOLLOWING DENOTES THE DIFFERENT INSULATION THICKNESSES INDICATED ON THE DRAWINGS:
    - L,L1 - 1 INCH INTERNALLY LINED
    - L15 - 1.5 INCH INTERNALLY LINED
    - L2 - 2 INCH INTERNALLY LINED
    - W,W1 - 1 INCH EXTERNALLY WRAPPED
    - W15 - 1.5 INCH EXTERNALLY WRAPPED
    - W2 - 2 INCH EXTERNALLY WRAPPED
19. DUCT CONNECTIONS TO EQUIPMENT, PIPING SIZES TO EQUIPMENT, AND EQUIPMENT SUPPORTS SHALL BE VERIFIED AND ADJUSTED TO MATCH ACTUAL EQUIPMENT FURNISHED.
20. ALL RELIEF VALVES SHALL BE PIPED TO FLOOR OR BELL-UP DRAINS.
21. THE LOCATION OF PIPING AND VALVES TO THE AIR HANDLING EQUIPMENT SHALL NOT INTERFERE WITH FILTER REMOVAL OR AIR HANDLING EQUIPMENT SERVICING.
22. ROOFTOP EQUIPMENT SHALL NOT BE LOCATED SUCH THAT ACCESS TO CONTROLS AND TO PERFORM SERVICE FOR EQUIPMENT IS LOCATED WITHIN 10 FEET OF THE BUILDING EDGE.
23. CONTROL DAMPER SIZES SHALL MATCH DIMENSIONS OF ASSOCIATED LOUVER UNLESS OTHERWISE INDICATED.
24. EQUIPMENT IDENTIFICATION PER DRAWING GI-3.

REGISTERED PROFESSIONAL ENGINEER — DAVID WILLIAM NELSON — 17980 — 21/22/11 — OKLAHOMA

REVISION	BY	DATE

LOWER BIRD CREEK WWTP EXPANSION
TMUA PROJECT NO. ES 2006-01
CONTRACT 1B

GENERAL
PLUMBING/HVAC
LEGEND, ABBREVIATIONS AND GENERAL NOTES

CITY OF TULSA, OKLAHOMA
TULSA METROPOLITAN UTILITY AUTHORITY
ENGINEERING SERVICES DEPARTMENT

PLANS AND ESTIMATES PREPARED BY:
BLACK & VEATCH Building a world of difference. — Black & Veatch Corporation, Kansas City, Missouri
Holloway, Updike and Bellen — Consulting Engineers, Muskogee · Broken Arrow
O'NEAL GATES — Consulting Engineering Services

PLAN SCALE: NONE	DRAWN	BDL		APPROVED:
	DESIGNED	MM,TD		
	SURVEY			
PROFILE SCALE:	FIELD MGR.	TOB	10/21	
HORIZONTAL: 1" =	SECT. MGR.			
	PROJ. MGR.	RBW	10/31/11	
VERTICAL 1" =	RECOMMENDED:	HAD	10/28/11	DIRECTOR
FILE: GP-01.DWG	DRAWING: GP-1			DATE 10/28/2011
ATLAS PAGE NO:				SHEET 12 OF 261 SHEETS

JGB 9-28-11 B&V PROJECT NO.145120

PLOTTED DATE: 9/22/2011 5:41:49 AM, Batch Plot
SAVED DATE: LOV16744, 9/20/2011 8:18:59 AM
CYGNET ID: 145120-3000-H-B0000SY13

FD145120
D145120BV

ONE-LINE DIAGRAM LEGEND

- 1500KVA, 2.4KVD-480Y/277, 3Ø, 60HZ — TRANSFORMER WITH PRIMARY AND SECONDARY VOLTAGE, AND KVA RATING AS NOTED
- 20 — 22: 3#8,#10G,2" — CIRCUIT NO.22 WITH #8 INSULATED CONDUCTORS, 1#10 BARE GROUND WIRE ALL IN 2" CONDUIT TO 20 HP MOTOR
- 15 — AUXILIARY ITEMS MAY NOT BE SHOWN COMPLETELY — ONE-LINE SHOWING POWER AND CONTROL TO A PACKAGE UNIT, AS FOR EXAMPLE A STEAM GENERATOR OR AN AIR HANDLING UNIT, SHALL IMPLY THAT ANY AND ALL ASSOCIATED EQUIPMENT SHALL ALSO BE INSTALLED AND WIRED AS REQUIRED BY THE EQUIPMENT FURNISHED.
- INDICATES THAT ALL OR PART OF CIRCUIT MAY BE ROUTED IN DUCT BANK OR UNDERGROUND. CONDUIT SIZE SHOWN ON ONE-LINE IS ABOVE GROUND AND/OR INSIDE OF STRUCTURE. SEE DUCT BANK SCHEDULE AND SECTIONS FOR CONDUIT SIZE OF UNDERGROUND PORTION OF CIRCUIT.
- HIGH VOLTAGE DRAWOUT AIR OR VACUUM CIRCUIT BREAKER
- 3P-20 — LOW VOLTAGE AIR CIRCUIT BREAKER, 3 POLE, 20 AMPERE
- S4 — SIZE 4 COMBINATION MAGNETIC MOTOR STARTER
- LOW VOLTAGE DRAWOUT AIR CIRCUIT BREAKER
- HIGH VOLTAGE DRAWOUT CONTACTOR
- FUSE AND DISCONNECT SWITCH
- S2 — SIZE 2 COMBINATION MAGNETIC MOTOR STARTER, REVERSING OR 2 SPEED
- S1 — SIZE 1 COMBINATION REDUCED VOLTAGE STARTER
- POTENTIAL TRANSFORMER
- CURRENT TRANSFORMER

CONDUIT & WIRING INSTALLATION LEGEND

- CONDUIT EXPOSED
- CONDUIT CONCEALED
- CONDUIT TURNING UP. CONDUIT TURNING DOWN.
- CONDUIT PLUGGED FLUSH. CONDUIT CAPPED.
- L2-5 — TYPICAL FOR HOME RUN TO BE ROUTED TO LIGHTING PANEL L2 & CONNECTED TO CIRCUIT #5 (MINIMUM NO. 12 AWG CONDUCTORS AND 3/4" CONDUIT)
- A — LIGHTING FIXTURE. REFER TO NUMBER OR LETTER IN FIXTURE SCHEDULE
- 11 — FLUORESCENT FIXTURE. REFER TO NUMBER OR LETTER IN FIXTURE SCHEDULE.
- LP1-3 — RECEPTACLE POWERED FROM LIGHTING PANEL LP1, CIRCUIT 3
- A LP2-2 — LIGHTING FIXTURE POWERED FROM LIGHTING PANEL LP2, CIRCUIT 2 (NON-SWITCHED)
- LPA-4 A / 11 — LIGHTING FIXTURE POWERED FROM LIGHTING PANEL LPA, CIRCUIT 4, VIA SWITCH A
- E — UNDERGROUND CONCRETE ENCASED ELECTRICAL DUCT BANK
- UNDERGROUND CONCRETE ENCASED ELECTRICAL BANK ROUTED BENEATH SLAB-ON-GRADE
- EE — DIRECT BURIED CONDUIT
- GROUND CONDUCTOR

SCHEMATIC SYMBOLS

- WIRE CONNECTION POINT
- EXTERNAL CONNECTION POINT
- NORMALLY OPEN CONTACT
- NORMALLY CLOSED CONTACT
- STARTER, CONTACTOR OR RELAY COIL
- NORMALLY OPEN PUSH BUTTON
- NORMALLY CLOSED PUSH BUTTON
- MAINTAINED PUSH BUTTON
- NORMALLY CLOSED GEARED LIMIT SWITCH
- NORMALLY OPEN GEARED LIMIT SWITCH
- INDICATING LIGHT
- FUSE
- POTENTIOMETER
- CAPACITOR
- DIODE
- RESISTOR
- CONTROL POWER TRANSFORMER
- SWITCH
- MS — MANUAL STARTER
- OL — OVERLOAD
- ELECTRODE
- FLOAT SWITCH (CLOSING ON RISING LEVEL)
- FLOAT SWITCH (OPENING ON RISING LEVEL)
- P — PRESSURE SWITCH (CLOSING ON RISING PRESSURE)
- P — PRESSURE SWITCH (OPENING ON RISING PRESSURE)
- V — VACUUM SWITCH (CLOSING ON INCREASING VACUUM)
- V — VACUUM SWITCH OPENING ON INCREASING VACUUM)
- TEMPERATURE SWITCH (CLOSING ON RISING TEMPERATURE)
- TEMPERATURE SWITCH (OPENING ON RISING TEMPERATURE)
- FLOW ACTUATED SWITCH (CLOSING ON INCREASE IN FLOW)
- FLOW ACTUATED SWITCH (OPENING ON INCREASE IN FLOW)
- ON TIME DELAY CONTACT (NORMALLY OPEN, WHEN THE COIL IS ENERGIZED THE CONTACT WILL CLOSE AFTER A TIME DELAY)
- ON TIME DELAY CONTACT (NORMALLY CLOSED, WHEN THE COIL IS ENGERGIZED THE CONTACT WILL OPEN AFTER A TIME DELAY)
- OFF TIME DELAY CONTACT (NORMALLY OPEN, WHEN THE COIL IS DE-ENERGIZED THE CONTACT WILL OPEN AFTER A TIME DELAY)
- OFF TIME DELAY CONTACT (NORMALLY CLOSED, WHEN THE COIL IS DE-ENERGIZED THE CONTACT WILL CLOSE AFTER A TIME DELAY)
- TORQUE SWITCH (NORMALLY OPEN)
- TORQUE SWITCH (NORMALLY CLOSED)
- LIMIT SWITCH (NORMALLY OPEN)
- LIMIT SWITCH (NORMALLY OPEN, HELD CLOSED)
- LIMIT SWITCH (NORMALLY CLOSED)
- LIMIT SWITCH (NORMALLY CLOSED, HELD OPEN)
- DIFFERENTIAL PRESSURE SWITCH (NORMALLY OPEN, CLOSING ON INCREASING DIFF.)
- DIFFERENTIAL PRESSURE SWITCH (NORMALLY CLOSED, OPENING ON INCREASING DIFF.)

MISCELLANEOUS SYMBOLS

- BELL
- HORN
- T — THERMOSTAT
- J — JUNCTION BOX
- GROUND ROD
- GROUND ROD WITH TEST WELL
- GROUND CONNECTION
- DISCONNECT SWITCH
- COMBINATION STARTER
- POWER PANEL
- LIGHTING PANEL
- MISCELLANEOUS PANEL
- LIGHTING CONTACTOR
- A/V — AUDIO-VISUAL ALARM

COMMUNICATION SYMBOLS

- HORN SPEAKER
- DUAL HORN SPEAKER
- WALL MOUNTED CONE SPEAKER
- SK — CEILING MOUNTED CONE SPEAKER
- WS WP — WALL STATION
- DS — DESK TOP STATION
- RH WP — REMOTE HANDSET
- SA — SPEAKER AMPLIFIER
- LB — LINE BALANCE ASSEMBLY
- TG — TONE GENERATOR
- TI — TELEPHONE INTERFACE
- IA — INTERFACE AMPLIFIER
- IJB — INTERCOM JUNCTION BOX

NOTE: WP=WEATHERPROOF
H=HAZARDOUS AREA

SWITCH & OUTLET SYMBOLS

S	SINGLE POLE SWITCH	S_{PL}	SWITCH WITH PILOT LIGHT		DUPLEX RECEPTACLE 120 VOLT		120 VOLT DUPLEX RECEPTACLE (UPS)
S_2	TWO POLE SWITCH	S_{KO}	KEY OPERATED SWITCH		SIMPLEX RECEPTACLE		DUPLEX FLOOR OUTLET
S_3	THREE-WAY SWITCH	S_{XP}	EXPLOSION PROOF SWITCH		RANGE RECEPTACLE		TELEPHONE OUTLET
S_4	FOUR-WAY SWITCH	S_{DM}	DIMMER SWITCH		TWISTLOCK RECEPTACLE		TELEPHONE FLOOR OUTLET
S_M^{C1}	MOMENTARY SWITCH CONTROLLING CONTACTOR C1	S_{3A}	THREE-WAY SWITCH CONTROLLING LIGHTS WITH "A" DESIGNATION	30	240V, 1Ø RECEPTACLE, TYPICAL AMPERE RATING NOTED	CX	COAXIAL CABLE OUTLET
S_{WP}	WEATHERPROOF SWITCH			60	480V, 3Ø WELDING RECEPTACLE, TYPICAL AMPERE RATING NOTED		

ABBREVIATIONS

A	AMBER, AMPERE, ALARM
AC	ALTERNATING CURRENT
ACB	AIR CIRCUIT BREAKER
AF	AMPERE FRAME
AFD	ADJUSTABLE FREQUENCY DRIVE
AM	AMMETER
ANN	ANNUNCIATOR
AR	ALARM RELAY
AS	AMMETER SWITCH
AT	AMPERE TRIP
AWG	AMERICAN WIRE GAGE
BC	BATTERY CHARGER
BR	BRAKE
BT	BEARING TEMPERATURE
C	CLOSE, COUNTER OR CONTACTOR
CAP	CAPACITOR
CB	CIRCUIT BREAKER
CB"A"	CIRCUIT BREAKER AUXILIARY CONTACT (OPEN WHEN BREAKER IS OPEN OR TRIPPED CLOSED WHEN BREAKER IS CLOSED)
CB"B"	CIRCUIT BREAKER AUXILIARY CONTACT (CLOSED WHEN BREAKER IS OPEN OR TRIPPED OPEN WHEN BREAKER IS CLOSED)
CD	CONTROL DAMPER
CI	CELL INTERLOCK
CKT	CIRCUIT
CL2	CHLORINE
COS	CABLE OPERATED SWITCH
CP	CONTROL PANEL
CPT	CONTROL POWER TRANSFORMER
CR	CURRENT OR CONTROL RELAY
CS	CONTROL STATION
CT	CYCLE TIMER OR CURRENT TRANSFORMER
CTC	CYCLE TIMER CLUTCH
CTM	CYCLE TIMER MOTOR
2/C	2 CONDUCTOR
4"C	4" CONDUIT
DC	DIRECT CURRENT
DI	DOOR INTERLOCK
DM	DAMPER MOTOR OR DEMAND METER
DPDT	DOUBLE POLE DOUBLE THROW
DPST	DOUBLE POLE SINGLE THROW
DPR	DIFFERENTIAL PRESSURE REGULATOR
DPS	DIFFERENTIAL PRESSURE SWITCH
DS	DISCONNECT SWITCH
DVLS	DISCHARGE VALVE LIMIT SWITCH
E	ELECTRIC OPERATOR FOR CONTROL DAMPER OR VALVE
EC	EMPTY CONDUIT
EL	ELEVATION OR EMERGENCY LIGHT
EMH	ELECTRICAL MANHOLE
ER	ELECTRODE RELAY
ES	END SWITCH
ETM	ELAPSED TIME METER
EX	EXISTING
F	FORWARD
FS	FLOW SWITCH
G	GREEN OR GROUND
GD	GROUND DETECTOR
GEN	GENERATOR
GFI	GROUND FAULT INTERRUPTER
GLS	GEARED LIMIT SWITCH
#8G	#8 GROUND WIRE
H	HIGH OR HUMIDISTAT
HC	HOT CIRCUIT
HH	HANDHOLE
HMT	HIGH MOTOR TEMPERATURE
HOA	HAND-OFF-AUTO
HOR	HAND-OFF-REMOTE
HP	HORSEPOWER
HWCO	HIGH WATER CUTOFF
HZ	HERTZ (CYCLE)
I/O	INPUT/OUTPUT
INST	INSTANTANEOUS
J	JUNCTION BOX
JB	JUNCTION BOX
K	KEY INTERLOCK
KCMIL	THOUSAND CIRCULAR MIL
KV	KILOVOLT
KVA	KILOVOLT AMPERE
KVAR	KILOVAR
KW	KILOWATT
KWH	KILOWATT HOUR
L	LOW, LEVEL
LA	LIGHTNING ARRESTER
LAN	LOCAL AREA NETWORK
LC	LIGHTING CONTACTOR
LOA	LOCAL-OFF-AUTO
LOR	LOCAL-OFF-REMOTE
LP	LIGHTING PANEL
LS	LIMIT OR LEVEL SWITCH
LWCO	LOW WATER CUTOFF
M	MAGNETIC MOTOR STARTER
MA	MILLIAMPERE
MCB	MAIN CIRCUIT BREAKER
MCC	MOTOR CONTROL CENTER
MCLU	MOTOR CONTROL LINEUP
MD	MOISTURE DETECTOR
MFM	MAGNETIC FLOW METER
MFR	MANUFACTURER
MH	MANHOLE OR MOUNTING HEIGHT
MOV	MOTOR OPERATED VALVE
MPR	MOTOR PROTECTION RELAY
MS	MANUAL MOTOR STARTER
MSH	MOTOR SPACE HEATER
MV	MILLIVOLT
MVA	MEGA VOLT AMPERE
N	NEUTRAL
NC	NORMALLY CLOSED
NO	NORMALLY OPEN, NUMBER
O	OPEN
OCB	OIL CIRCUIT BREAKER
OL	OVERLOAD
OQA	ON-OFF-AUTO
OOR	ON-OFF-REMOTE
P	PRIMARY
PCS	PLANT CONTROL SYSTEM
PB	PUSH BUTTON OR PULL BOX
PF	POWER FACTOR METER
PH	PHASE, CHEMICAL TERM
PLC	PROGRAMMABLE LOGIC CONTROLLER
PP	POWER PANEL
PRS	PROXIMITY SWITCH
PS	PRESSURE SWITCH
PT	POTENTIAL TRANSFORMER, PROGRAM TIMER
2P	2 POLE
R	RED, RAISE, RELAY OR REVERSE
RECP	RECEPTACLE
RES	RESISTOR
RT	REPEATING TIMER
RTD	RESISTANCE TYPE TEMP DETECTOR
RTU	REMOTE TERMINAL UNIT
RVSS	REDUCED VOLTAGE SOLID STATE STARTER
S2	SIZE 2 STARTER
SCADA	SUPERVISORY CONTROL AND DATA ACQUISITION
SH	SPACE HEATER
SN	SOLID NEUTRAL
SO	SOLENOID OILER
SP	SINGLE POLE
SPD	SURGE PROTECTION DEVICE
SPDT	SINGLE POLE DOUBLE THROW
SPST	SINGLE POLE SINGLE THROW
SS	SELECTOR SWITCH
SSS	SOLID STATE STARTER
SUPV	SUPERVISORY CONTROL
SV	SOLENOID VALVE
SWB	SWITCHBOARD
SWGR	SWITCHGEAR
T	THERMOSTAT, TIMER, OR TOTALIZER
TACH	TACHOMETER
TB	TERMINAL BLOCK
TC	TIMER CLUTCH
TD	TIME DELAY RELAY
TEMP	TEMPERATURE
TM	TIMER MOTOR
TQ	TORQUE
TS	TEMPERATURE SWITCH
TTB	TELEPHONE TERMINAL BOX
UG	UNDERGROUND
UV	UNDER VOLTAGE
UPS	UNINTERRUPTIBLE POWER SUPPLY
V	VOLTS
VA	VOLT AMPERE
VAR	VARMETER
VLS	VALVE LIMIT SWITCH
VM	VOLTMETER
VPI	VALVE POSITION INDICATOR
VS	VOLTMETER SWITCH
W	WHITE OR WATTS
WH	WATTHOUR METER
WM	WATT METER
WP	WEATHERPROOF
WPI	WEATHERPROOF IN-USE
X	AUXILIARY RELAY
XFMR	TRANSFORMER
XP	EXPLOSION PROOF
Y	YELLOW
Z	AUXILIARY RELAY
ZS	POSITION SWITCH
ZSS	ZERO SPEED SWITCH
1-1PR#16S	ONE, SINGLE PAIR, TWISTED, SHIELDED #16 CABLE
3-7/C#14	THREE, SINGLE, SEVEN CONDUCTOR #14 MULTICONDUCTOR CONTROL CABLES

AREA DESIGNATIONS

THE SPECIAL AREA DESIGNATION BOXES, AS DEFINED BELOW, ARE LOCATED ON THE PLAN DRAWINGS TO DEFINE ELECTRICAL INSTALLATION REQUIREMENTS. DESIGNATION BOXES ARE LOCATED WITHIN ROOM OR BELOW ROOM NUMBER. ALL INDOOR AREAS NOT INDICATED OTHERWISE ARE AREA TYPE 1 AND MINIMUM NEMA TYPE 1 ENCLOSURES.

- AREA TYPE 1A — CORROSIVE CHEMICAL FEED AND STORAGE ROOMS. CONDUIT SYSTEM SHALL BE EXPOSED PVC RIGID NON-METALLIC CONDUIT WITH PVC FITTINGS, BOXES, AND ACCESSORIES.
- AREA TYPE 4 — INDOOR WET LOCATIONS SUCH AS VAULTS, HOSEDOWN AREAS, BASEMENTS, ETC. MINIMUM NEMA TYPE 4 ENCLOSURE FOR EQUIPMENT AND GASKETED FITTINGS IN A CONDUIT SYSTEM.
- AREA TYPE 7A — CLASS I, DIVISION 1 AREA AS DEFINED BY NEC. ALL EQUIPMENT AND CONDUIT SYSTEMS SHALL BE RATED FOR USE IN THIS AREA.
- AREA TYPE 7B — CLASS I, DIVISION 2, GROUP C AND D (METHANE, GASOLINE) AS DEFINED BY NEC. EQUIPMENT AND CONDUITS SYSTEMS SHALL BE RATED FOR USE IN THIS AREA.
- AREA TYPE 12 — INDOOR, DRY, DIRTY AREA. REQUIRES MINIMUM NEMA TYPE 12 GASKETED ENCLOSURES FOR ALL EQUIPMENT AND GASKETED FITTINGS IN CONDUIT SYSTEMS.

GENERAL REQUIREMENTS

1. THE CONTRACTOR SHALL BE RESPONSIBLE FOR ROUTING ALL CONDUITS NOT SHOWN ON THE PLANS. THIS SHALL INCLUDE ALL CONDUITS SHOWN ON THE ONE-LINES AND HOME-RUNS SHOWN ON THE PLAN DRAWINGS. CONDUITS SHALL BE ROUTED AS DEFINED IN THE SPECIFICATIONS.
2. SPARE WIRES SHALL BE TAPED AND COILED.
3. IF EQUIPMENT SUPPLIED BY MANUFACTURER HAS A LARGER LOAD THAN VALUE SHOWN, THE CABLE CONDUIT AND ELECTRICAL EQUIPMENT SHALL BE ENLARGED, AS REQUIRED, TO ACCOMMODATE THE HIGHER VALUE.
4. THE CONTRACTOR SHALL BE RESPONSIBLE FOR FURNISHING PROPERLY SIZED STARTER OVERLOADS FOR EQUIPMENT FURNISHED.
5. LIGHTING AND RECEPTACLE CIRCUITS DESIGNATED ON THE FLOOR PLANS ARE NOT SHOWN ON THE ONE-LINES. CONDUCTORS FOR LIGHTING, RECEPTACLES, AND MISCELLANEOUS 120VAC CIRCUITS SHALL BE MINIMUM NO. 12 AWG. CONDUIT FOR LIGHTING, RECEPTACLES, AND MISCELLANEOUS 120VAC CIRCUITS SHALL BE MINIMUM 3/4".
6. IN AREAS WHERE THERE ARE OVERHEAD BRIDGE CRANES, HOISTS, ETC., NO CONDUITS SHALL BE RUN OVERHEAD THAT WILL INTERFERE WITH THE OPERATION OF THE EQUIPMENT.

GENERAL NOTES

1. SOLID LINES (————) INDICATE NEW WORK OR EQUIPMENT.
2. SCREENED LINES (————) INDICATE EXISTING WORK OR EQUIPMENT.
3. DASHED LINES (– – – – –) INDICATE FUTURE WORK OR EQUIPMENT.
4. REFER TO THE FOLLOWING DRAWING(S) FOR INSTRUMENTATION LEGEND: GI-1, GI-2, GI-3
5. THIS IS A GENERAL LEGEND SHEET. SOME SYMBOLS AND ABBREVIATIONS MAY NOT BE UTILIZED ON THIS SPECIFIC PROJECT.
6. INFORMATION RELATED TO CIRCUIT IDENTIFICATION, WIRE & CONDUIT SIZES, AND ROUTING, IS ON THE FOLLOWING DRAWING TYPES.
   - A. ONE-LINE DIAGRAMS SHOW CIRCUIT IDENTIFICATION, WIRE QUANTITY AND SIZES, AND CONDUIT SIZE WITHIN STRUCTURES. ONE-LINE DIAGRAMS ALSO INDICATE ORIGIN AND DESTINATION OF CIRCUITS, AND IDENTIFY CIRCUITS ROUTED UNDERGROUND.
   - B. FOR CIRCUITS WITHOUT UNDERGROUND PORTIONS, BUILDING FLOOR PLANS SHOW LOCATION OF EQUIPMENT FOR DETERMINING CIRCUIT LENGTH WITHIN THE STRUCTURE. FOR CIRCUITS WITH UNDERGROUND PORTIONS, ANTICIPATED PENETRATION OF UNDERGROUND CONDUITS ARE SHOWN ON STRUCTURE PLANS FOR DETERMINING THE LENGTH OF THE IN-STRUCTURE PORTIONS OF CIRCUITS. BUILDING FLOOR PLANS MAY ALSO SHOW HOME RUNS FOR LIGHTING, RECEPTACLE, AND OTHER MISCELLANEOUS EQUIPMENT CIRCUITS.
   - C. SITE PLANS INDICATE THE GENERAL ROUTING OF UNDERGROUND CONDUITS AND DUCT BANKS. CIRCUITS ROUTED IN UNDERGROUND CONDUITS OR DUCT BANKS ARE INDICATED IN DUCT BANK SECTIONS REFERENCED ON THE SITE PLAN.
   - D. DUCT BANK SECTIONS AND SCHEDULES IDENTIFY CONDUIT SIZE CONDUIT MATERIAL, ARRANGEMENT OF THE UNDERGROUND CONDUITS, AND CIRCUITS ROUTED IN EACH UNDERGROUND CONDUIT.

REGISTERED PROFESSIONAL ENGINEER — JOHN R. HENDRICK 15274 — OKLAHOMA — 9/23/11

REVISION	BY	DATE

LOWER BIRD CREEK WWTP EXPANSION
TMUA PROJECT NO. ES 2006-01
CONTRACT 1B

GENERAL
ELECTRICAL
LEGEND AND ABBREVIATIONS

CITY OF TULSA, OKLAHOMA
TULSA METROPOLITAN UTILITY AUTHORITY
ENGINEERING SERVICES DEPARTMENT

PLANS AND ESTIMATES PREPARED BY:
BLACK & VEATCH Building a world of difference. — Black & Veatch Corporation, Kansas City, Missouri
Holloway, Updike and Bellon Consulting Engineers, Muskogee · Broken Arrow
DWGATES Engineering Services

PLAN SCALE:	DRAWN	KMA	APPROVED:
	DESIGNED	SDS	
	SURVEY		
PROFILE SCALE:	FIELD MGR.	TCB 10/11	
HORIZONTAL: 1" =	SECT. MGR.		
	PROJ. MGR.	RBH 10/31/11	
VERTICAL 1" =	RECOMMENDED: HAV 10/28/11		DIRECTOR
FILE:	DRAWING: GE-1		DATE 10/28/2011
ATLAS PAGE NO:			SHEET 13 OF 261 SHEETS

JRH 9-28-11 B&V PROJECT NO. 145120

PLOTTED DATE: DEV12267, 5/27/2011 2:47:21 PM
SAVED DATE: AND49974, 9/22/2011 8:55:28 AM
CYGNET ID: 145120-3000-E-B00003N9S

FD145120
D145120BV

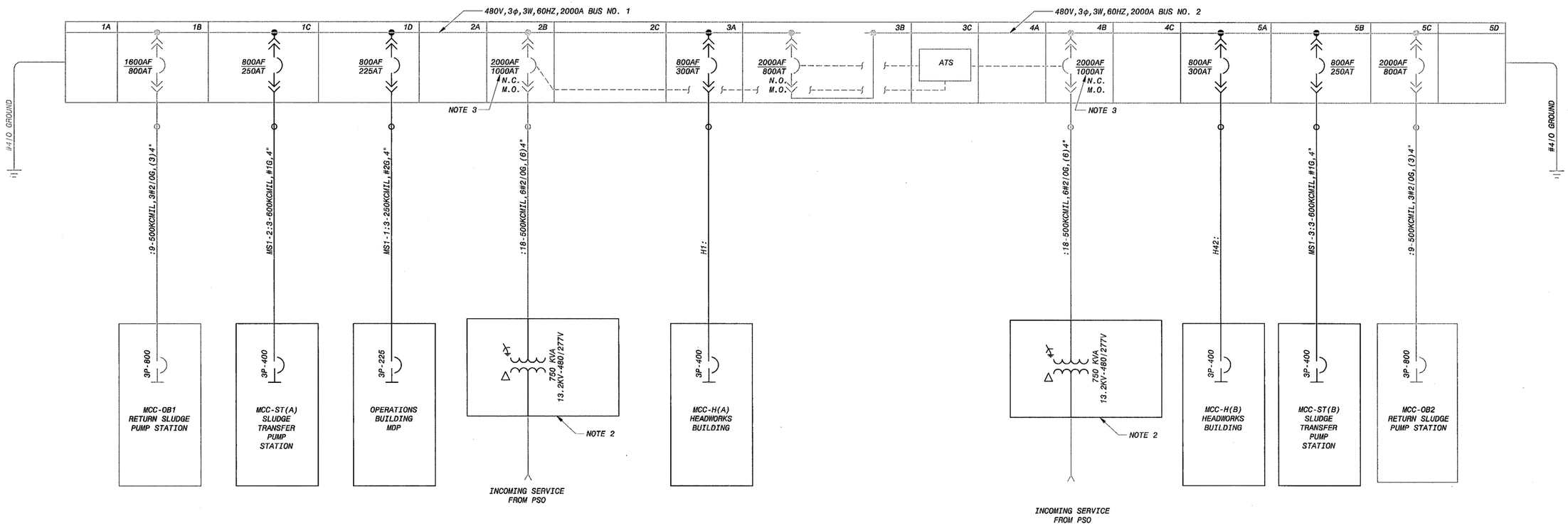

OUTDOOR SWITCHBOARD MS-1
ONE-LINE DIAGRAM

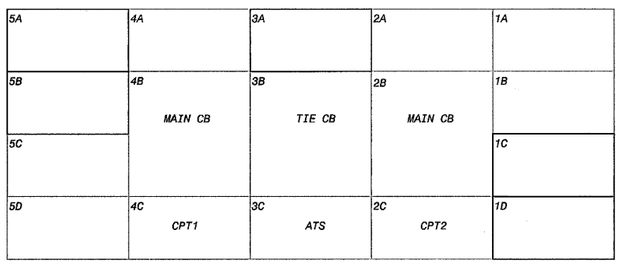

MAIN SWITCHBOARD MS-1 FRONT ELEVATION
(NO SCALE)

NOTES:

1. SEE DRAWING GE-1 FOR ELECTRICAL LEGEND & ABBREVIATIONS AND GENERAL REQUIREMENTS.
2. REPLACE EXISTING 500 KVA TRANSFORMERS WITH NEW TRANSFORMERS SPECIFIED UNDER 16320. CONTRACTOR SHALL BE RESPONSIBLE FOR DISCONNECTING EXISTING TRANSFORMERS, SALVAGING TO OWNER, PLACING NEW TRANSFORMERS, AND RE-CONNECTING NEW TRANSFORMERS TO EXISTING CABLES.
3. CONTRACTOR SHALL MODIFY EXISTING BREAKER TO ACHIEVE TRIP SETTING AS SHOWN.

REGISTERED PROFESSIONAL ENGINEER
JOHN R. HENDRICK
15274
OKLAHOMA
9/23/11

REVISION	BY	DATE

LOWER BIRD CREEK WWTP EXPANSION
TMUA PROJECT NO. ES 2006-01
CONTRACT 1B

GENERAL
ELECTRICAL
POWER DISTRIBUTION ONE-LINE DIAGRAMS

CITY OF TULSA, OKLAHOMA
TULSA METROPOLITAN UTILITY AUTHORITY
ENGINEERING SERVICES DEPARTMENT

PLANS AND ESTIMATES PREPARED BY:

BLACK & VEATCH Building a world of difference. Black & Vaatch Corporation Kansas City, Missouri
Holloway, Updike and Bellen Consulting Engineers Muskogee • Broken Arrow
DWGATES Engineering Services

PLAN SCALE:	DRAWN	KMA	APPROVED:
	DESIGNED	SDS	
	SURVEY		
PROFILE SCALE:	FIELD MGR.	JDS 10/11	
HORIZONTAL: 1" =	SECT. MGR.		
	PROJ. MGR.	RBW 10/3/11	
VERTICAL 1" =	RECOMMENDED: HHS 10/26/11		DIRECTOR
FILE:	DRAWING: GE-2		DATE 10/28/2011
ATLAS PAGE NO:			SHEET 14 OF 261 SHEETS

JRH 9-23-11 B&V PROJECT NO. 145120

PLOTTED DATE: COL50859, 8/18/2009 3:01:32 PM
SAVED DATE: AND49974, 9/21/2011 10:35:12 AM
CYGNET ID: 145120-3000-E-B0000SN2J
FD145120
D145120BV

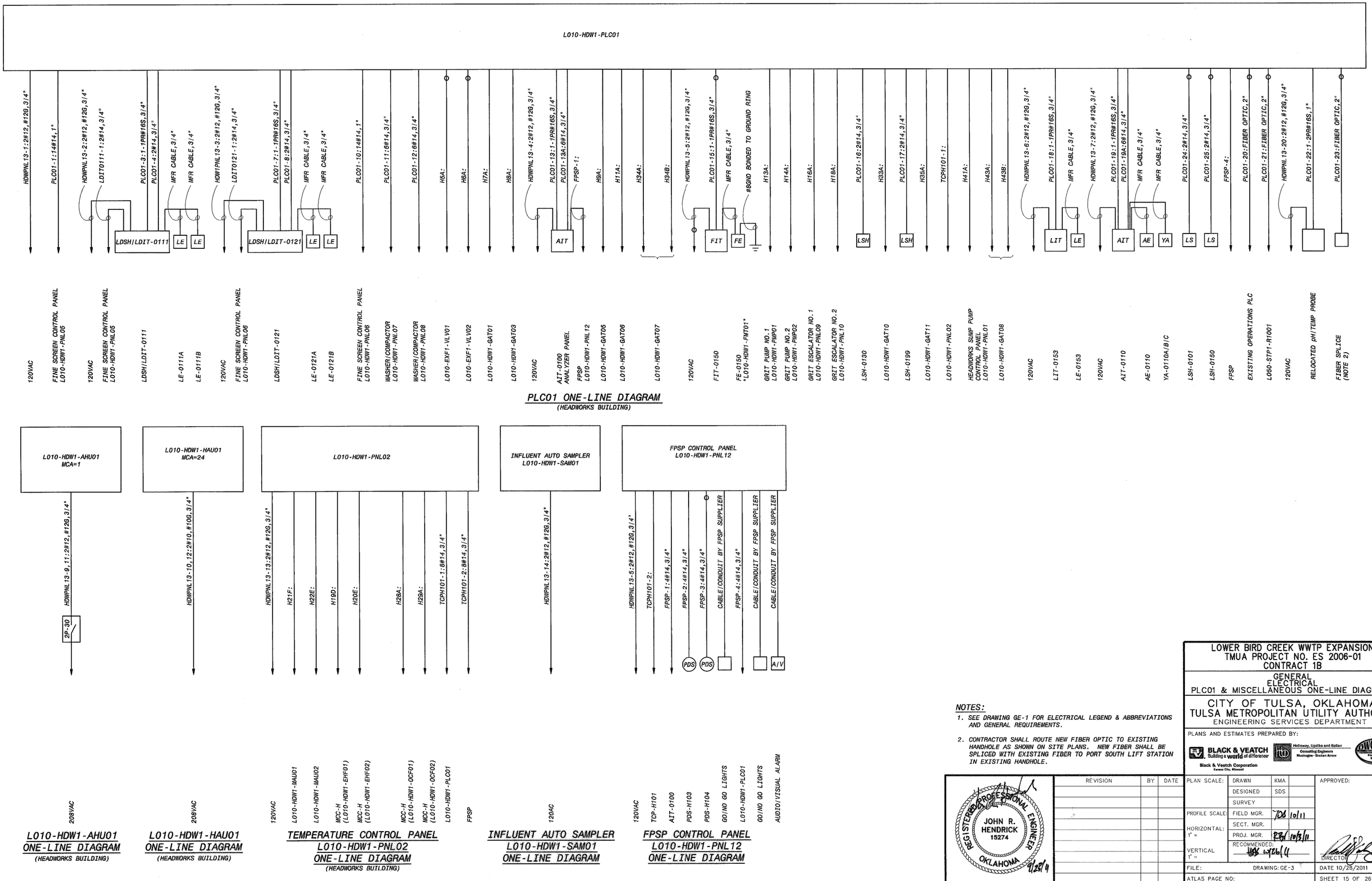

NOTES:

1. SEE DRAWING GE-1 FOR ELECTRICAL LEGEND & ABBREVIATIONS AND GENERAL REQUIREMENTS.
2. CONTRACTOR SHALL ROUTE NEW FIBER OPTIC TO EXISTING HANDHOLE AS SHOWN ON SITE PLANS. NEW FIBER SHALL BE SPLICED WITH EXISTING FIBER TO PORT SOUTH LIFT STATION IN EXISTING HANDHOLE.

REGISTERED PROFESSIONAL ENGINEER
JOHN R. HENDRICK
15274
OKLAHOMA
9/28/11

REVISION	BY	DATE

LOWER BIRD CREEK WWTP EXPANSION
TMUA PROJECT NO. ES 2006-01
CONTRACT 1B

GENERAL
ELECTRICAL
PLC01 & MISCELLANEOUS ONE-LINE DIAGRAMS

CITY OF TULSA, OKLAHOMA
TULSA METROPOLITAN UTILITY AUTHORITY
ENGINEERING SERVICES DEPARTMENT

PLANS AND ESTIMATES PREPARED BY:

BLACK & VEATCH Building a world of difference
Black & Veatch Corporation, Kansas City, Missouri
Holloway, Updike and Bellan Consulting Engineers, Muskogee · Broken Arrow
OWGATES Engineering Services

PLAN SCALE:	DRAWN	KMA		APPROVED:
	DESIGNED	SDS		
	SURVEY			
PROFILE SCALE:	FIELD MGR.	TDS	10/11	
HORIZONTAL: 1" =	SECT. MGR.			
	PROJ. MGR.		10/3/11	
VERTICAL 1" =	RECOMMENDED:		10/26/11	DIRECTOR
FILE:	DRAWING: GE-3			DATE 10/28/2011
ATLAS PAGE NO:				SHEET 15 OF 261 SHEETS

B&V PROJECT NO. 145120

PLOTTED DATE: DEV12267, 6/2/2011 4:54:50 PM
SAVED DATE: AKO4974, 9/21/2011 10:35:07 AM
CYBNET ID: 145120-30000-E-B00001.DGN

FD145120
D145120SV

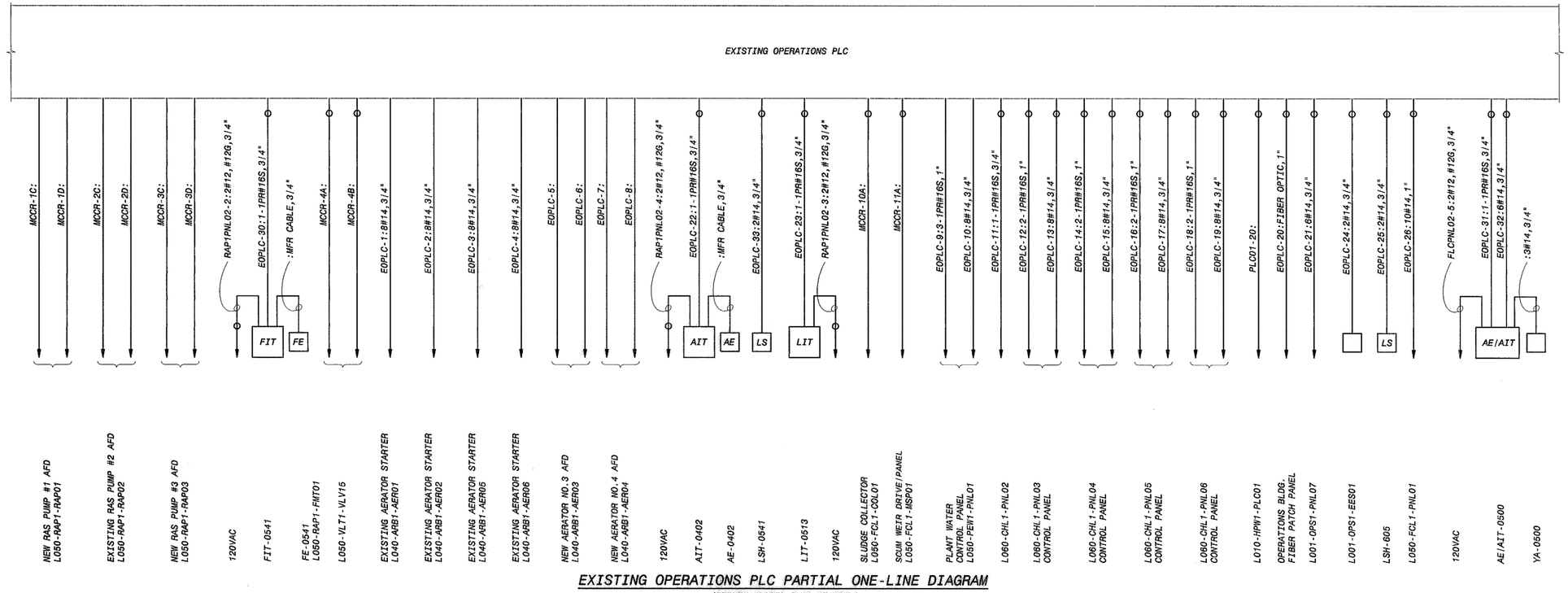

EXISTING OPERATIONS PLC PARTIAL ONE-LINE DIAGRAM

(RETURN SLUDGE PUMP STATION)

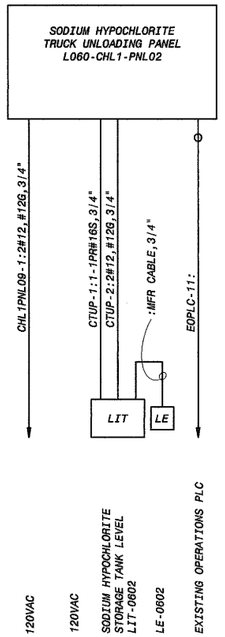

L060-CHL1-PNL02 SODIUM HYPOCHLORITE TRUCK UNLOADING PANEL ONE-LINE DIAGRAM

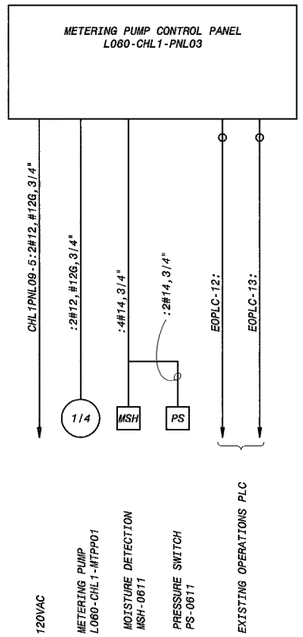

L060-CHL1-PNL03 METERING PUMP CONTROL PANEL ONE-LINE DIAGRAM

TYPICAL FOR:
L060-CHL1-MTP02/PNL04
L060-CHL1-MTP03/PNL05
L060-CHL1-MTP04/PNL06

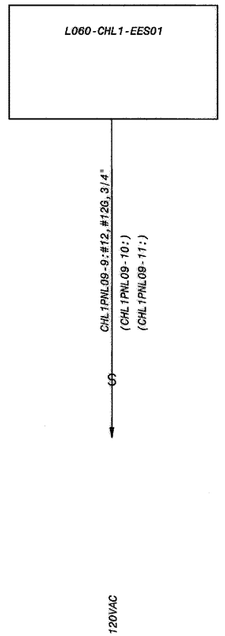

L060-CHL1-EES01 EMERGENCY SHOWER ONE-LINE DIAGRAM

TYPICAL FOR:
L060-CHL1-EES02,
L060-CHL1-EES03

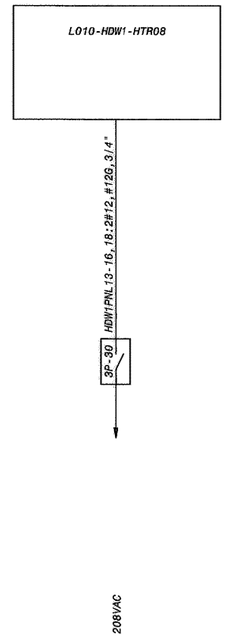

L010-HDW1-HTR08 ONE-LINE DIAGRAM

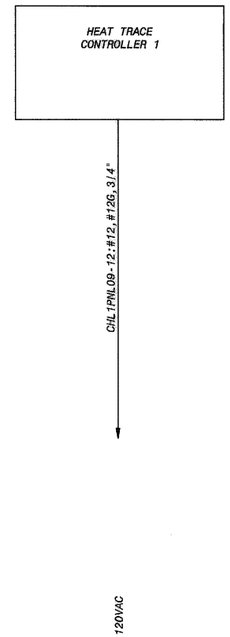

HEAT TRACE CONTROLLER 1 ONE-LINE DIAGRAM

TYPICAL OF 6

NOTES:

1. SEE DRAWING GE-1 FOR ELECTRICAL LEGEND & ABBREVIATIONS AND GENERAL REQUIREMENTS.

REGISTERED PROFESSIONAL ENGINEER JOHN R. HENDRICK 15274 OKLAHOMA 9/23/11

REVISION	BY	DATE

LOWER BIRD CREEK WWTP EXPANSION
TMUA PROJECT NO. ES 2006-01
CONTRACT 1B

GENERAL
ELECTRICAL
EXISTING OPERATIONS PLC ONE-LINE

CITY OF TULSA, OKLAHOMA
TULSA METROPOLITAN UTILITY AUTHORITY
ENGINEERING SERVICES DEPARTMENT

PLANS AND ESTIMATES PREPARED BY:

BLACK & VEATCH Building a world of difference. Black & Veatch Corporation Kansas City, Missouri

Holloway, Updike and Bellen Consulting Engineers Muskogee · Broken Arrow

DWGATES Engineering Services

PLAN SCALE:	DRAWN	KMA		APPROVED:
	DESIGNED	SDS		
	SURVEY			
PROFILE SCALE:	FIELD MGR.	TOB	10/11	
HORIZONTAL: 1" =	SECT. MGR.			
	PROJ. MGR.	RBV	10/3/11	
VERTICAL 1" =	RECOMMENDED: HAS 10/26/11			DIRECTOR
FILE:	DRAWING: GE-4			DATE 10/28/2011
ATLAS PAGE NO:				SHEET 16 OF 261 SHEETS

JRH 9-28-11

B&V PROJECT NO. 145120

PLOTTED DATE: DEV12267, 6/2/2011 4:53:55 PM
SAVED DATE: AN049974, 9/21/2011 10:34:19 AM
CYGNET ID: 145120-3000-E-BG000130W

FD145120
D145120BV

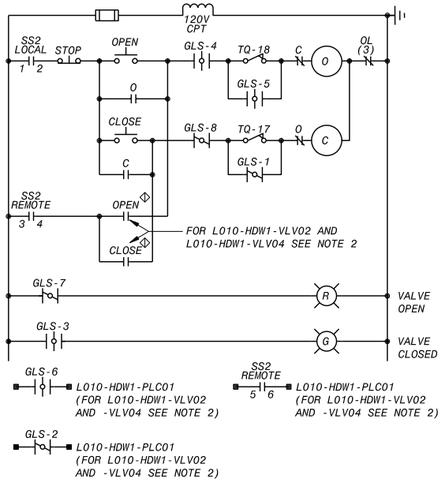

VALVE ACTUATOR
L010-EXF1-VLV01

SIMILAR FOR L010-EXF1-VLV02, L010-HDW1-VLV02, L010-HDW1-VLV04)

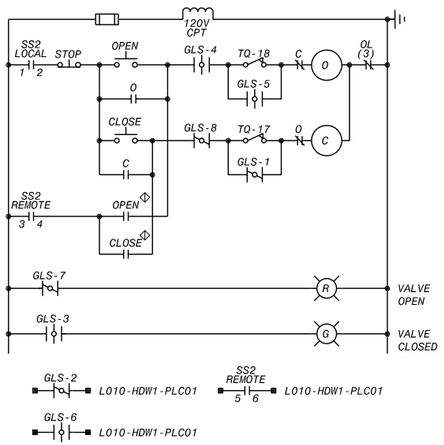

GATE ACTUATOR
L010-HDW1-GAT01

(SIMILAR FOR L010-HDW1-GAT03, L010-HDW1-GAT05, L010-HDW1-GAT06)

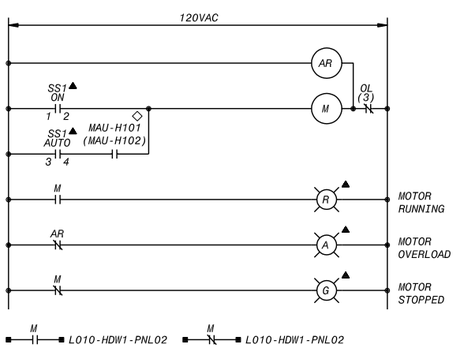

L010-HDW1-OCF01

(SIMILAR FOR L010-HDW1-OCF02)

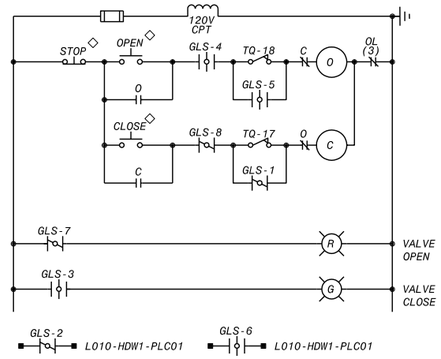

GATE ACTUATOR
L010-HDW1-GAT10

(SIMILAR FOR L010-HDW1-GAT11)

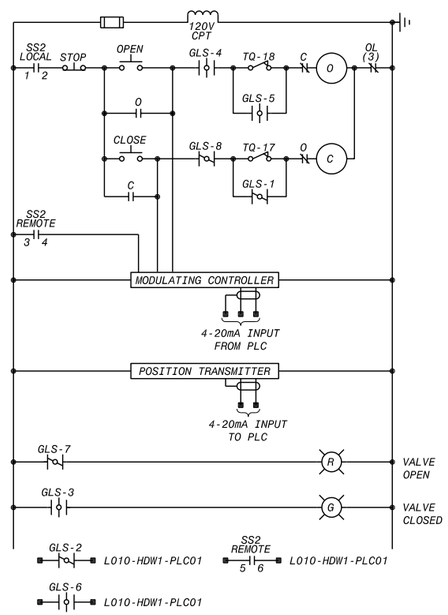

GATE ACTUATOR
L010-HDW1-GAT07

(SIMILAR FOR L010-HDW1-GAT08)

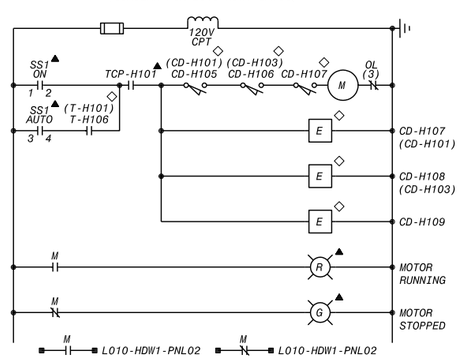

L010-HDW1-EHF02

(SIMILAR FOR L010-HDW1-EHF01)

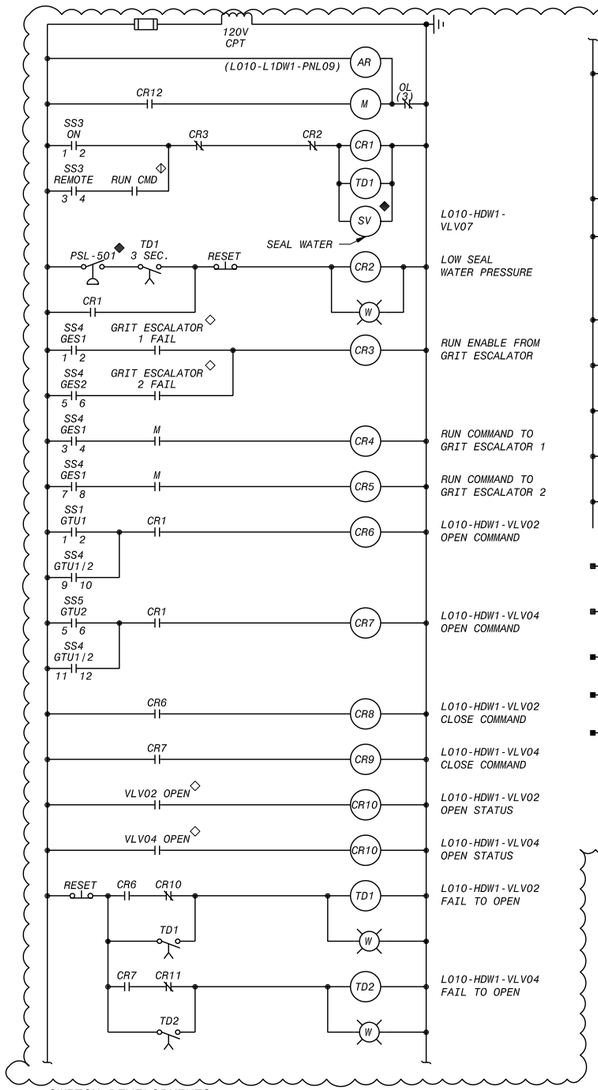

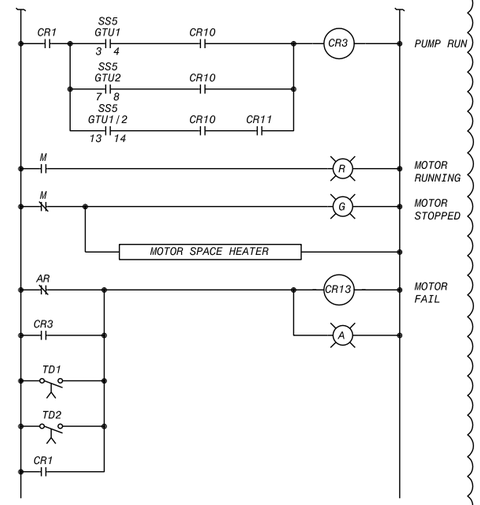

GRIT PUMP NO.1
L010-HDW1-PMP01

(SIMILAR FOR L010-HDW1-PMP02)

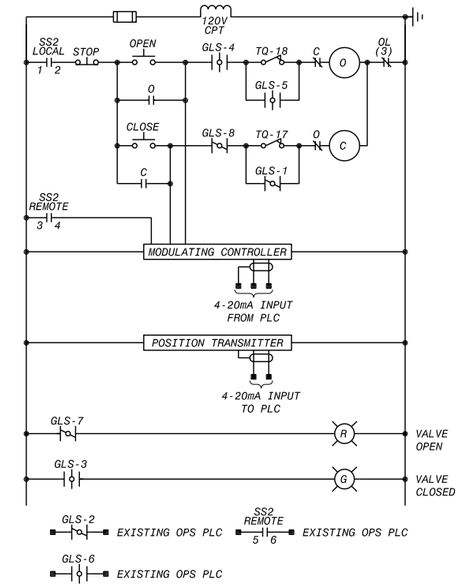

VALVE ACTUATOR
L050-RAP1-VLV15

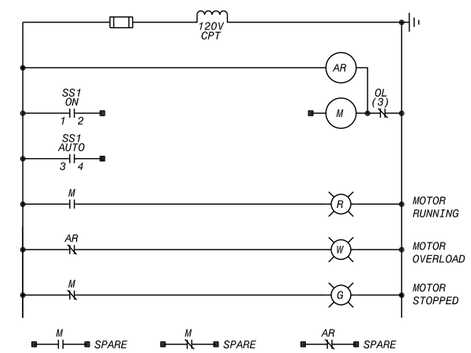

MCC SPARE STARTER

SWITCH DEVELOPMENTS

ROTOR	GLS CONTACT	ACTUATOR POSITION: FULL OPEN 0%	INTERMEDIATE POSITION (90%)	FULL CLOSED 100%
1	1			
	2			
	3			
	4			
2	5			
	6			
	7			
	8			
3	9			
	10			
	11			
	12			
4	13			
	14			
	15			
	16			

TQ/17 OPENS ON HIGH CLOSING TORQUE
TQ/18 OPENS ON HIGH OPENING TORQUE
=CONTACT CLOSED

SS1

CONTACTS	POSITION: ON	OFF	AUTO
1-2	X		
3-4			X

SS2

CONTACTS	POSITION: LOCAL	OFF	REMOTE
1-2	X		
3-4			X
5-6			X

SS3

CONTACTS	POSITION: ON	OFF	REMOTE
1-2	X		
3-4			X
5-6			X

SS4

CONTACTS	POSITION: GES1	GES2
1-2	X	
3-4	X	
5-6		X
7-8		X

SS5

CONTACTS	POSITION: GTU1	GTU2	GTU1/2
1-2	X		
3-4	X		
5-6		X	
7-8		X	
9-10			X
11-12			X
13-14			X

2

SYMBOL LEGEND

- ◆ AT DRIVEN EQUIPMENT
- ◇ REMOTE FROM STARTER & DRIVEN EQUIPMENT
- ▲ AT OR FROM TEMPERATURE CONTROL PANEL
- ◇ FROM PLC

NOTES:

1. SEE DRAWING GE-1 FOR ELECTRICAL LEGEND & ABBREVIATIONS AND GENERAL REQUIREMENTS.
2. VALVE ACTUATORS L010-HDW1-VLV02 AND L010-HDW1-VLV04 ARE CONTROLLED AND MONITORED FROM ITS RESPECTIVE GRIT CONTROL PANEL. SEE ONE-LINE DIAGRAMS FOR DETAILS.

REGISTERED PROFESSIONAL ENGINEER JOHN R. HENDRICK 15274 OKLAHOMA 9/23/11

REVISION	BY	DATE
ADDENDUM NO. 2	PSB	1-13-12

LOWER BIRD CREEK WWTP EXPANSION
TMUA PROJECT NO. ES 2006-01
CONTRACT 1B

GENERAL ELECTRICAL SCHEMATICS

CITY OF TULSA, OKLAHOMA
TULSA METROPOLITAN UTILITY AUTHORITY
ENGINEERING SERVICES DEPARTMENT

PLANS AND ESTIMATES PREPARED BY:
BLACK & VEATCH Building a world of difference. Black & Veatch Corporation Kansas City, Missouri
Mallowney, Upchike and Bollen Consulting Engineers Muskogee · Broken Arrow
DWGATES Engineering Services

PLAN SCALE:	DRAWN	KMA	APPROVED:
	DESIGNED	SDS	
	SURVEY		
PROFILE SCALE:	FIELD MGR.	10/11	
HORIZONTAL: 1" =	SECT. MGR.		
	PROJ. MGR.	10/31/11	
VERTICAL 1" =	RECOMMENDED:	10/26/11	DIRECTOR
FILE:	DRAWING: GE-5		DATE 10/28/2011
ATLAS PAGE NO:			SHEET 17 OF 261 SHEETS

9-28-11 B&V PROJECT NO. 145120

HET5330G, 6/14/2011 10:06:02 AM
SCH42738, 5/5/2012 11:53:26 AM
PW FLDR: 145120.... (General)

FD145120

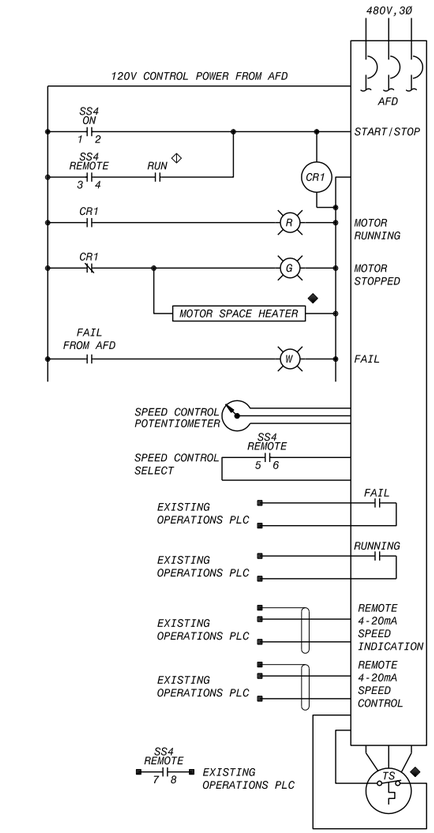

OXIDATION DITCH ROTOR
L040-ARB1-AER03
(SIMILAR FOR L040-ARB1-AER04)

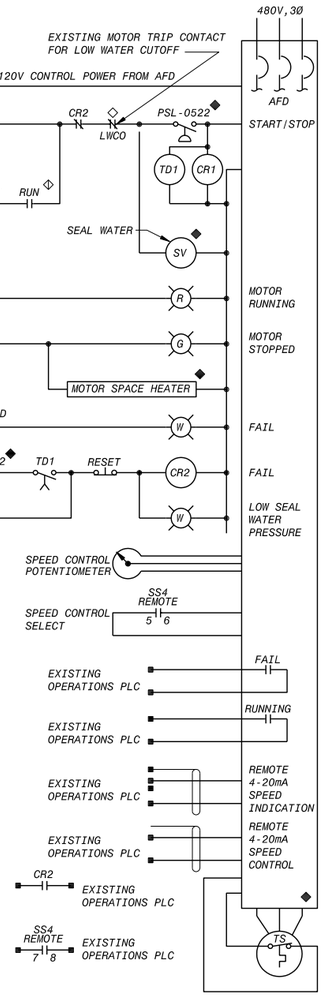

RAS PUMP NO.1
L050-RAP1-RAP01
(SIMILAR FOR L050-RAP1-RAP03)

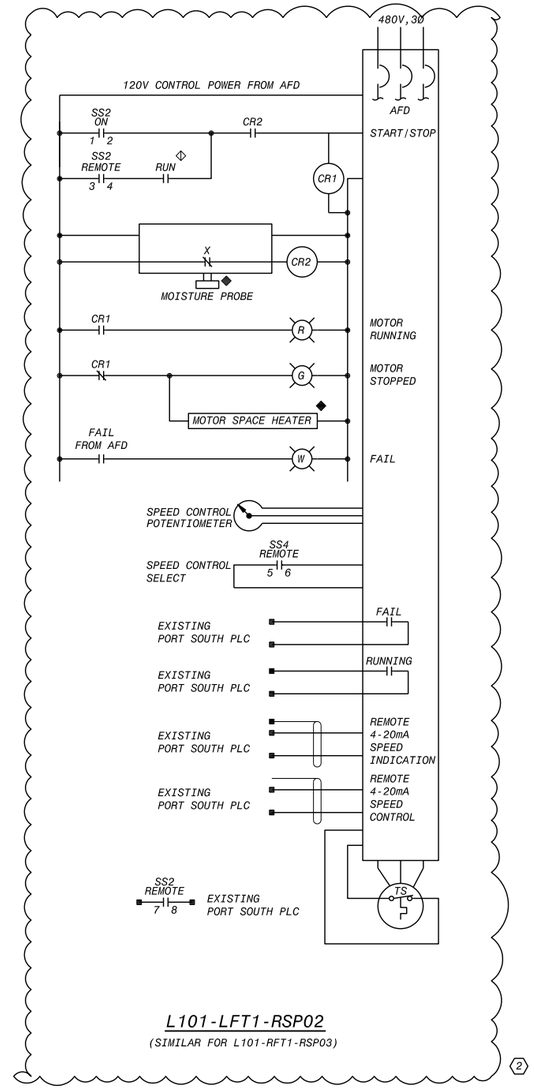

L101-LFT1-RSP02
(SIMILAR FOR L101-RFT1-RSP03)

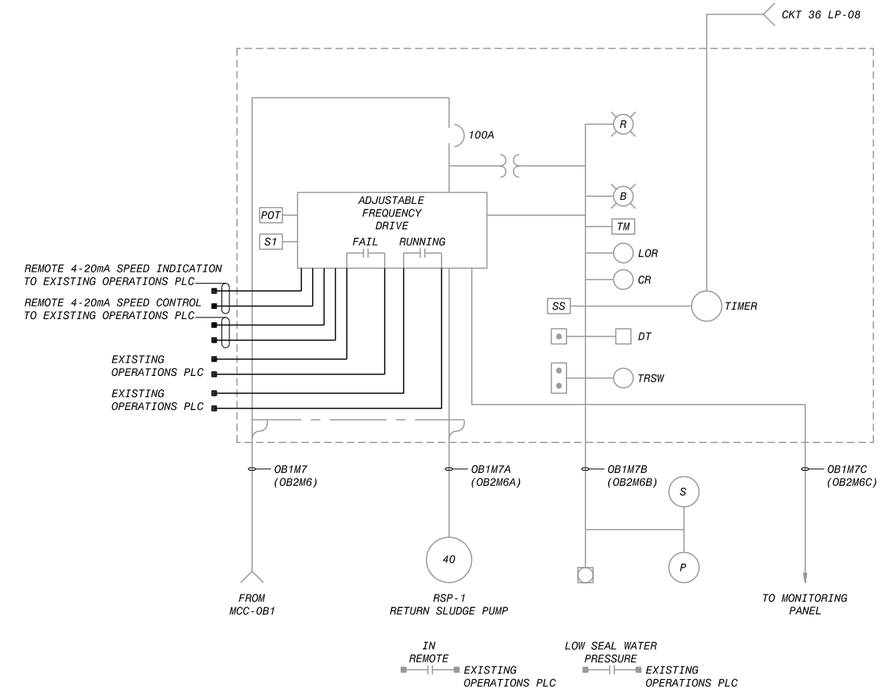

EXISTING RETURN SLUDGE PUMP AFD
RSP-2

SWITCH DEVELOPMENTS

SS4

CONTACTS	POSITION ON	OFF	REMOTE
1-2	×		
3-4			×
5-6			×
7-8			×

SS6

CONTACTS	POSITION ON	OFF	REMOTE
1-2	×		
3-4			×
5-6			×
7-8			×

SS5

CONTACTS	POSITION ON	OFF	AUTO
1-2	×		
3-4			×
5-6			×

SYMBOL LEGEND

- ◆ AT DRIVEN EQUIPMENT
- ◇ REMOTE FROM STARTER & DRIVEN EQUIPMENT
- ▲ AT OR FROM TEMPERATURE CONTROL PANEL
- ◇ FROM PLC

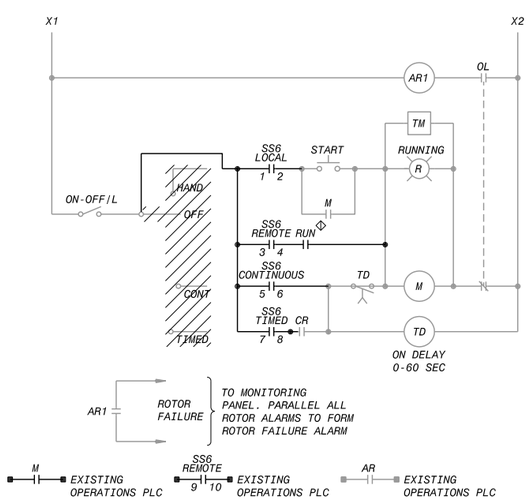

EXISTING AERATOR STARTER
L040-ARB1-AER01
(SIMILAR FOR L040-ARB1-AER02, L040-ARB1-AER05, L040-ARB1-AER06)

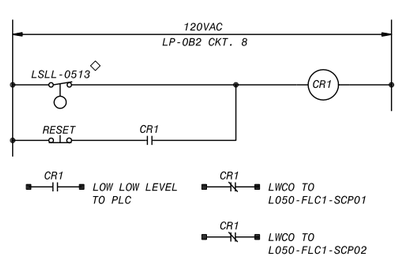

LOW WATER CUT-OFF PANEL (LWCO)

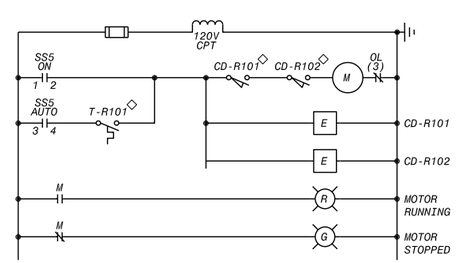

L050-RAP1-EHF01

NOTES:

1. SEE DRAWING GE-1 FOR ELECTRICAL LEGEND & ABBREVIATIONS AND GENERAL REQUIREMENTS.
2. CONTRACTOR SHALL PROVIDE RATED ENCLOSURE TO HOUSE SCUM PUMP MOISTURE AND MOTOR TEMPERATURE CONTROL RELAYS. ENCLOSURE SHALL BE INSTALLED NEAR MOTOR.

REGISTERED PROFESSIONAL ENGINEER JOHN R. HENDRICK 15274 OKLAHOMA 9/28/11

REVISION	BY	DATE
ADDENDUM NO. 2	PSB	1-13-12

LOWER BIRD CREEK WWTP EXPANSION
TMUA PROJECT NO. ES 2006-01
CONTRACT 1B

GENERAL ELECTRICAL SCHEMATICS

CITY OF TULSA, OKLAHOMA
TULSA METROPOLITAN UTILITY AUTHORITY
ENGINEERING SERVICES DEPARTMENT

PLANS AND ESTIMATES PREPARED BY:
BLACK & VEATCH Building a world of difference. Black & Veatch Corporation Kansas City, Missouri
Hoffman, Updike and Dallas Consulting Engineers Multiagency • Broken Arrow
DWGATES Engineering Services

PLAN SCALE:	DRAWN	KMA	APPROVED:
	DESIGNED	SDS	
	SURVEY		
PROFILE SCALE:	FIELD MGR.	10/3/11	
HORIZONTAL: 1" =	SECT. MGR.		
	PROJ. MGR.	10/3/11	
VERTICAL 1" =	RECOMMENDED: HAS 10/26/11		DIRECTOR
FILE:	DRAWING: GE-6		DATE 10/28/2011
ATLAS PAGE NO:			SHEET 18 OF 261 SHEETS

9-28-11 B&V PROJECT NO. 145120

HET53306, 6/14/2011 8:28:50 AM
CH42738, 5/3/2012 12:00:55 PM
PW FLDR: 145120...\General

FD145120

EQUIPMENT IDENTIFICATION DESCRIPTION

P999-BBB9-EEE99

- PLANT DESIGNATOR
- GENERAL AREA OF EQUIPMENT
- BUILDING/BASIN ASSOCIATED WITH EQUIPMENT
- EQUIPMENT TAG

PIPELINE DESCRIPTION

SSS - FFF - MMM - 9

- PIPE SIZE - INCHES UNLESS OTHERWISE NOTED
- SYSTEM CODE - DENOTES ASSOCIATED SYSTEM STREAM
- MATERIAL CODE - DENOTES ASSOCIATED MATERIAL ABBREVIATION
- SPECIAL CODE

GENERAL NOTES

1. IN GENERAL, THE P&ID SYMBOLS AND DEVICE IDENTIFICATIONS ARE BASED ON INSTRUMENT SOCIETY OF AMERICA, STANDARD PRACTICE ISA-S5.1 (1988). SOME MODIFICATIONS, ADDITIONS, AND ALTERATIONS HAVE BEEN MADE AS NEEDED TO ACCOMMODATE THE PROJECT REQUIREMENTS.
2. SOME CONTROL AND INTERLOCK REQUIREMENTS WHICH CAN BE MORE CLEARLY ILLUSTRATED ON SCHEMATIC DRAWINGS HAVE BEEN OMITTED FROM THE P&ID DRAWINGS.
3. THIS IS A GENERAL LEGEND SHEET. SOME SYMBOLS AND ABBREVIATIONS MAY NOT BE UTILIZED ON THIS SPECIFIC PROJECT.
4. PIPING AND EQUIPMENT LEGEND APPLIES TO P&ID SHEETS ONLY AND MAY DIFFER FROM LEGENDS FOR OTHER SHEETS.

LINE SYMBOLS

- MAJOR PROCESS PIPING OR FLOW CHANNEL
- SECONDARY PROCESS PIPING
- MISCELLANEOUS PIPING
- SCREENED LINE DENOTES EXISTING PIPE OR EQUIPMENT
- DASHED LINE DENOTES FUTURE PIPE AND EQUIPMENT
- ELECTRIC SIGNAL
- HYDRAULIC SIGNAL
- PNEUMATIC SIGNAL
- SIGNAL CONNECTION POINT
- INTERNAL SYSTEM SIGNAL LINK (SOFTWARE OR DATA LINK)
- B AI45 — SIGNAL LINE GOING TO ANOTHER SHEET
- B AI45 — SIGNAL LINE FROM ANOTHER SHEET (MATCH LETTERS)
- FLOW ARROW FOR PROCESS PIPING
- B AI45 — PROCESS LINE GOING TO ANOTHER SHEET
- MATCH SHEET NO. IDENTIFIER
- MATCH LINE NO.
- B AI45 — PROCESS LINE COMING FROM ANOTHER SHEET
- PROCESS LINES CROSSING (NOT CONNECTED)

MECHANICAL EQUIPMENT SYMBOLS

- VAPORIZER: WATER BATH
- VAPORIZER: AMBIENT
- PARTICULATE FILTER
- AIR STRIPPER OR PACKED TOWER
- MIXER
- AIR FILTER
- WATER FILTER: CARTRIDGE TYPE
- WATER FILTER: MEMBRANE TYPE
- FLOCCULATION MIXER
- COMPRESSOR
- M — VALVE: MATERIAL HANDLING ROTARY
- AIR REGULATOR
- HEAT EXCHANGER: TYPE 1
- HEAT EXCHANGER: TYPE 2
- HEAT EXCHANGER: FINNED TUBE
- HEAT EXCHANGER: SHELL & TUBE
- HEAT EXCHANGER: PLATE & FRAME
- HEAT EXCHANGER: SPIRAL
- HEAT EXCHANGER: TUBE-IN-TUBE
- HEAT EXCHANGER: AIR
- BOILER
- PACKAGED AIR COMPRESSOR SYSTEM
- COOLING TOWER
- AFTERCOOLER
- STATIC MIXER
- WATER HEATER
- FILTER SEPARATOR
- SILENCER
- SWIVEL
- DAMPER
- DAMPER: PARALLEL BLADE
- DAMPER: OPPOSITE BLADE

PUMP & BLOWER SYMBOLS

- CENTRIFUGAL PUMP OR OTHER TYPE NOT SPECIFIED
- SUBMERGED CENTRIFUGAL PUMP
- SCREW (LIFT) PUMP
- ROTARY PUMP
- PROGRESSING CAVITY PUMP
- POSITIVE DISPLACEMENT PUMP
- PLUNGER PUMP
- VERTICAL PUMP
- SUMP PUMP
- CENTRIFUGAL FAN
- METERING PUMP
- TURBINE COMPRESSOR
- STEAM COMPRESSOR
- GAS TURBINE ENGINE
- CENTRIFUGAL BLOWER
- POSITIVE DISPLACEMENT BLOWER
- COMPRESSOR: RECIPROCATING
- COMPRESSOR: ROTARY SCREW
- COMPRESSOR: LIQUID RING
- DIAPHRAGM METERING PUMP
- S — SOLENOID PUMP
- PERISTALTIC PUMP
- DRUM PUMP
- DOUBLE DIAPHRAGM
- T — TURBINE
- SUBMERSIBLE PUMP
- BELL MOUNTED PUMP

WASTEWATER PROCESS SYMBOLS

- CLARIFIER: RECTANGULAR
- CLARIFIER: CIRCULAR
- UV CHANNEL
- BASIN: ANOXIC/OXIC
- BASIN: OXIC
- AERATION BASIN
- BAR SCREEN: MANUAL
- BAR SCREEN: MECHANICAL
- DAF TANK
- GRAVITY THICKENER
- SLUDGE GRINDER: INLINE
- SLUDGE GRINDER: CHANNEL MTD
- SLUDGE SCREEN: INLINE
- GRIT COLLECTOR: VORTEX TYPE
- MUFFIN MONSTER
- GRIT CONCENTRATOR & DEWATERING SCREW
- GRIT COLLECTOR: AERATED TYPE
- GRAVITY BELT THICKENER
- BELT FILTER PRESS
- CENTRIFUGE
- TRICKLING FILTER
- DIGESTER
- FLOATING COVER
- FIXED COVER
- GAS HOLDER COVER
- MEMBRANE COVER
- UV BANK
- GAS FLARE
- S — SEPARATOR
- FOAM SEPARATOR
- SCRAPER

PRIMARY ELEMENT & FITTING SYMBOLS

- DIAPHRAGM SEAL
- PRIMARY FLOW ELEMENT: ORIFICE PLATE
- PRIMARY FLOW ELEMENT: FLUME
- PRIMARY FLOW ELEMENT: TURBINE OR PROPELLER-TYPE
- PRIMARY FLOW ELEMENT: ELECTROMAGNETIC
- THERMAL DISPERSION TYPE FLOW ELEMENT
- PRIMARY FLOW ELEMENT: TRANSIT-TIME ULTRASONIC
- TE 101 — TEMPERATURE ELEMENT WITH THERMOWELL
- LE — ELECTRODE TYPE LEVEL SWITCH
- ANNULAR TYPE DIAPHRAGM SEAL
- PRIMARY FLOW ELEMENT: POSITIVE DISPLACEMENT
- PRIMARY FLOW ELEMENT: VENTURI TUBE
- PRIMARY FLOW ELEMENT: WEIR
- PRIMARY FLOW ELEMENT: PITOT TUBE
- PRIMARY FLOW ELEMENT: CORIOLIS
- PRIMARY FLOW ELEMENT: DOPPLER TYPE ULTRASONIC
- FE 100 — PRIMARY ELEMENT: ROTAMETER
- LE 100 — ULTRASONIC LEVEL ELEMENT
- REDUCER - CONCENTRIC
- REDUCER - ECCENTRIC
- FLANGE
- D — DRAIN - BELL-UP
- D — DRAIN - FUNNEL
- FLEXIBLE CONNECTION
- CAP
- PLUG
- T — TRAP
- FLAME CHECK
- SURGE CHAMBER
- FLAME ARRESTER
- SEDIMENT TRAP
- UNION
- HOSE CONNECTION
- STRAINER - Y TYPE
- STRAINER - BASKET
- Q — QUICK CONNECT
- VENT
- VENT - SCREENED
- COUPLING
- SIGHTGLASS
- MOISTURE SEPARATOR
- END CAP
- EXPANSION LOOP

VALVE & GATE SYMBOLS

- SLU — GATE: SLU=SLUICE, SLD= SLIDE
- VALVE: GATE OR OTHER IN-LINE TYPE NOT OTHERWISE IDENTIFIED
- VALVE: BALL, AWWA=AMERICAN WATER WORKS ASSOCIATION
- VALVE: GLOBE
- VALVE: BUTTERFLY, DAMPER OR LOUVER: IND=INDUSTRIAL, AWWA=AMERICAN WATER WORKS ASSOCIATION, SS=STAINLESS STEEL
- VALVE: PLUG
- VALVE: THREE WAY
- VALVE: FOUR WAY
- VALVE: CHECK
- VALVE: CHLORINE
- VALVE: CHLORINE WITH YOKE
- VALVE: DIAPHRAGM
- VALVE: VPORT BALL
- VALVE: PRESSURE REDUCING
- VALVE: PRESSURE SUSTAINING
- VALVE: PRESSURE REDUCING (SELF ACTUATING TYPE)
- VALVE: PRESSURE SUSTAINING (SELF ACTUATING TYPE)
- VALVE: PILOT
- VALVE: VACUUM RELIEF
- VALVE: PRESSURE RELIEF
- VALVE: PRESSURE/VACUUM RELIEF
- VALVE: FOUR FUNCTION
- VALVE: ANGLE
- VALVE: SET STOP
- VALVE: PINCH
- VALVE: AIR-VACUUM
- VALVE: AIR RELEASE
- VALVE: THERMAL SHUTOFF
- VALVE: MUD
- VALVE: SLEEVE
- VALVE: KNIFE GATE
- M — CHLORINE VACUUM REGULATOR
- BACKFLOW PREVENTER
- GATE: FLAP
- VACUUM BREAKER
- EXPLOSION RELIEF
- OVERFLOW WEIR
- VALVE: NEEDLE
- VALVE: TELESCOPING

MATERIAL HANDLING EQUIPMENT SYMBOLS

- CYCLONE SEPARATER
- BIN: LIVE BOTTOM
- BIN: SLIDING FRAME
- SCREEN: SINGLE VIBRATORY
- SCREEN: DOUBLE VIBRATORY
- GRINDER
- PELLETIZER
- BIN - OPEN TOP
- HOPPER
- HORIZONTAL BAR SCREEN
- MIXER: BLENDER
- DUST HOPPER
- BIN - CLOSED TOP
- WASHER/COMPACTOR
- CONVEYOR: BUCKET
- CONVEYOR: BELT
- CONVEYOR: VIBRATORY
- H — PISTON CAKE PUMP: SINGLE
- H H — PISTON CAKE PUMP: DOUBLE
- MIXER: PUGMILL

CHEMICAL FEED EQUIPMENT SYMBOLS

- DIFFUSER: TANK
- DIFFUSER: CHANNEL
- INJECTOR
- RUPTURE DISK
- PULSATION DAMPNER
- CHEMICAL INDUCTION UNIT
- CHLORINE CYLINDER
- VAPOR SUPERHEATER
- PRESSURE BUILDING COIL
- SPECTACLE, BLIND, CLOSED
- CALIBRATION COLUMN
- EXPANSION TANK OR FUNNEL
- WEIGH SCALE
- DRIP LEG HEATER
- SCALE
- TOTE — TOTE
- AS — AUTOMATIC SWITCHOVER
- SPECTACLE, BLIND, OPEN
- GAS FEEDER
- EVAPORATOR
- DRY CHEMICAL FEEDER
- TON CONTAINER
- POLYMER BLENDER FEEDER
- POLYMER BLENDER FEEDER
- MIXER PADDLE
- FERRIC STIRRER
- PASTE TYPE LIME SLAKER
- POLYMER ACTIVATION CHAMBER — POLYMER ACTIVATION CHAMBER
- PIPELINE DIFFUSER
- POLYMER INJECTION RING
- ACTIVATION CHAMBER
- DIFFUSER
- EDUCTOR
- CO2 VAPORIZOR
- COMBINATION SHOWER/EYEWASH FOUNTAIN
- DIFFUSER - PLAN
- EYEWASH FOUNTAIN
- PLATFORM WEIGHER
- SHOWER
- SUSPENDED WEIGHER
- BRIDGE WEIGHER
- WEIGHING MACHINE

VALVE AND GATE ACTUATOR SYMBOLS

- H HW — HANDWHEEL ACTUATOR
- H CW — CHAINWHEEL ACTUATOR
- H WN — WRENCH NUT ACTUATOR
- H L — LEVER ACTUATOR
- M SM — SMALL MOTOR ACTUATOR
- P — PNEUMATIC ACTUATOR
- M — STANDARD ELECTRIC
- M N — NETWORKED ELECTRIC
- E/H — ELECTRIC-HYDRAULIC
- M P — PROGRAMMABLE ELECTRIC
- H — HYDRAULIC
- S — SOLENOID
- P/O — AIR-OIL
- P DA — PNEUMATIC ACTUATOR DOUBLE ACTING
- P SC — PNEUMATIC ACTUATOR SPRING CLOSE
- P SO — PNEUMATIC ACTUATOR SPRING OPEN
- DIAPHRAGM VALVE
- QUICK OPENING VALVE
- QUICK CLOSING VALVE
- WEIGHT LOADED VALVE
- FLOAT OPERATED VALVE
- SPRING LOADED VALVE
- LOADING/BACK PRESSURE VALVE

THE FOLLOWING ADDITIONAL DESIGNATIONS MAY BE UTILIZED ADJACENT TO SOME VALVE OR GATE SYMBOLS.

NC NORMALLY CLOSED
NO NORMALLY OPEN
FC FAILS CLOSED
FO FAILS OPEN
FIP FAILS IN LAST POSITION

REGISTERED PROFESSIONAL ENGINEER — TIMOTHY A. HOLMES — 20954 — 9-23-11 — OKLAHOMA

REVISION	BY	DATE

LOWER BIRD CREEK WWTP EXPANSION
TMUA PROJECT NO. ES 2006-01
CONTRACT 1B

GENERAL
P&ID - LEGEND AND ABBREVIATIONS
SHEET 1 OF 3

CITY OF TULSA, OKLAHOMA
TULSA METROPOLITAN UTILITY AUTHORITY
ENGINEERING SERVICES DEPARTMENT

PLANS AND ESTIMATES PREPARED BY:
BLACK & VEATCH Building a world of difference. — Black & Veatch Corporation, Kansas City, Missouri
Holloway, Updike and Ballou — Consulting Engineers, Muskogee · Broken Arrow
DWGATES Engineering Services

PLAN SCALE:	DRAWN	SCD		APPROVED:
	DESIGNED	SCD		
	SURVEY			
PROFILE SCALE:	FIELD MGR.	TX	10/11	
HORIZONTAL: 1" =	SECT. MGR.			
	PROJ. MGR.	RSW	10/31/11	
VERTICAL 1" =	RECOMMENDED: HAS 10/28/11			DIRECTOR
FILE:	DRAWING: GI-1			DATE 10/28/2011
ATLAS PAGE NO:	:	:		SHEET 19 OF 261 SHEETS

JGS 9-28-11

B&V PROJECT NO. 145120

PLOTTED DATE: 9/21/2011 8:59:12 PM, Batch Plot
SAVED DATE: OGL2653L 6/13/2011 3:27:03 PM
CYGNET ID: 145120-3000-I-B000R9CB

FD145120
D145120SV

INSTRUMENT TAG NUMBERS

MEANINGS OF IDENTIFICATION LETTERS

LETTER	FIRST LETTER		SUCCEEDING LETTERS		
	MEASURED OR INITIATING VARIABLE	MODIFIER	READOUT OR PASSIVE FUNCTION	OUTPUT FUNCTION	MODIFIER
A	ANALYSIS		ALARM		
B	BURNER, COMBUSTION		USER'S CHOICE	USER'S CHOICE	USER'S CHOICE
C	CONDUCTIVITY (ELECTRICAL)			CONTROL	CLOSED
D	DENSITY (MASS) OR SPECIFIC GRAVITY	DIFFERENTIAL			
E	VOLTAGE (EMF)		PRIMARY ELEMENT		
F	FLOW RATE	RATIO (FRACTION)			
G	USER'S CHOICE		GLASS		
H	HAND (MANUALLY INITIATED)				HIGH
I	CURRENT (ELECTRICAL)		INDICATE		
J	POWER	SCAN			
K	TIME OR TIME-SCHEDULE	TIME RATE OF CHANGE		CONTROL STATION	
L	LEVEL		LIGHT (PILOT)		LOW
M	MOISTURE OR HUMIDITY	MOMENTARY			MIDDLE OR INTER-MEDIATE
N	USER'S CHOICE		USER'S CHOICE	USER'S CHOICE	USER'S CHOICE
O	USER'S CHOICE		ORIFICE (RESTRICTION)		OPEN
P	PRESSURE OR VACUUM		POINT (TEST CONNECTION)		
Q	QUANTITY	INTEGRATE OR TOTALIZE	INTEGRATE OR TOTALIZE		
R	RADIATION		RECORD OR PRINT		
S	SPEED OR FREQUENCY	SAFETY		SWITCH	
T	TEMPERATURE			TRANSMIT	
U	MULTIVARIABLE		MULTIFUNCTION	MULTIFUNCTION	MULTIFUNCTION
V	VIBRATION			VALVE, DAMPER, OR LOUVER	
W	WEIGHT OR FORCE		WELL		
X	UNCLASSIFIED		UNCLASSIFIED	UNCLASSIFIED	UNCLASSIFIED
Y	EVENT, STATE, OR PRESENCE			RELAY OR COMPUTE	
Z	POSITION, DIMENSION			DRIVE, ACTUATOR OR UNCLASSIFIED FINAL CONTROL ELEMENT	

GENERAL INSTRUMENT SYMBOLS

FIELD MOUNTED INSTRUMENT

INSTRUMENT MOUNTED ON FACE OF PANEL

INSTRUMENT MOUNTED BEHIND OR INSIDE OF PANEL

INSTRUMENT MOUNTED ON FACE OF LOCAL PANEL

INSTRUMENT MOUNTED BEHIND OR INSIDE OF LOCAL PANEL

SINGLE INSTRUMENT HOUSING CONTAINING TWO (OR MORE) INSTRUMENTATION FUNCTIONS

I — CONTROL INTERLOCK FUNCTION, SEE SCHEMATICS AND SYSTEM SPECIFICATIONS FOR SPECIFIC FUNCTION

TAG NUMBERS AND ADDITIONAL DESIGNATIONS

P TRC 3111A

FIRST LETTER
SUCCEEDING LETTERS
A LETTER AFTER THE LOOP NUMBER (3111A, 31111B, ETC) IS USED TO DISTINQUISH MULTIPLE SIMILAR DEVICES IN THE SAME INSTRUMENT LOOP.
LOOP DESIGNATION NUMBER

pH — SEE INSTRUMENT FUNCTIONAL DESIGNATIONS AND ABBREVIATIONS.

DIGITAL SYSTEMS INTERFACE SYMBOLS

NOTE: REFER TO DETAILED SYSTEM SPECIFICATIONS FOR FUNCTIONAL DESCRIPTION. ALSO SEE I/O SCHEDULES FOR COMPLETE INPUT AND OUTPUT LISTINGS.

COMPUTER, DISTRIBUTED CONTROL SYSTEM, OR DISPLAY FUNCTION BLOCK

LETTERS, TAG NUMBERS, ABBREVIATIONS AND OTHER ANNOTATIONS ARE SIMILAR TO THE GENERAL INSTRUMENT LEGEND

AC 130 — PROGRAMMABLE LOGIC CONTROLLER SYSTEM FUNCTION BLOCK

"CB" NUMBER REFERS TO SOFTWARE CONTROL BLOCK DESCRIPTION IN THE SPECIFICATIONS.

DIGITAL SYSTEM I/O INTERFACE DIRECTION OF ARROW DENOTES WHETHER INPUT OR OUTPUT

▽ DISCRETE I/O

▲ ANALOG I/O

FUNCTION DESIGNATIONS AND ABBREVIATIONS

INSTRUMENT DESIGNATIONS

K	GAIN OR ATTENUATE (INPUT:OUTPUT) GAIN AND REVERSE
-K	
Σ	ADD OR SUM (ADD AND SUBTRACT)
Δ	SUBTRACT (DIFFERENCE)
√	EXTRACT SQUARE ROOT
÷	DIVIDE
F(X)	CHARACTERIZE SIGNAL
>	HIGH-SELECT
<	LOW-SELECT
×	MULTIPLY
∫	INTEGRATE (TIME INTEGRAL)
CH_4	METHANE
CL_2	CHLORINE RESIDUAL
CO_2	CARBON DIOXIDE
DO	DISSOLVED OXYGEN
LEL	LOWER EXPLOSIVE LIMIT
MCC	MOTOR CONTROL CENTER
MLSS	MIXED LIQUOR SUSPENDED SOLIDS
O_2	OXYGEN (PURITY)
pH	pH CELL
TURB	TURBIDITY

HAND SWITCH DESIGNATIONS

HOA	HAND-OFF-AUTO
LR	LOCAL REMOTE
OC	OPEN-CLOSE
OO	ON-OFF
LOR	LOCAL-OFF-REMOTE
OOA	ON-OFF-AUTO
OCR	OPEN-CLOSE-REMOTE
OOR	ON-OFF-REMOTE
FR	FORWARD-REVERSE

TRANSDUCER & CONVERTER DESIGNATION

E	VOLTAGE
FSK	FREQUENCY SHIFT KEYING
H	HYDRAULIC
I	CURRENT
P	PNEUMATIC PULSE
PD	PULSE DURATION
PF	PULSE FREQUENCY
R	RESISTANCE (ELECTRICAL)

EXAMPLE: I/P = CURRENT TO PNEUMATIC TRANSDUCER

POWER SUPPLY ABBREVIATIONS

AS	AIR SUPPLY
ES	ELECTRIC SUPPLY
GS	GAS SUPPLY
HS	HYDRAULIC SUPPLY
NS	NITROGEN SUPPLY
SS	STEAM SUPPLY
WS	WATER SUPPLY

AS — POWER SUPPLY SOURCE LABEL. USED ONLY WHERE NECESSARY TO HELP CLARIFY AN INSTRUMENT OR SYSTEM FUNCTION.

GENERAL NOTES

1. IN GENERAL, THE P&ID SYMBOLS AND DEVICE IDENTIFICATIONS ARE BASED ON INTERNATIONAL SOCIETY OF AUTOMATION, STANDARD PRACTICE ISA-S5.1 (1988). SOME MODIFICATIONS, ADDITIONS, AND ALTERATIONS HAVE BEEN MADE AS NEEDED TO ACCOMMODATE THE PROJECT REQUIREMENTS.
2. SOME CONTROL AND INTERLOCK REQUIREMENTS WHICH CAN BE MORE CLEARLY ILLUSTRATED ON SCHEMATIC DRAWINGS HAVE BEEN OMITTED FROM P&ID DRAWINGS.
3. THIS IS A GENERAL LEGEND SHEET. SOME SYMBOLS AND ABBREVIATIONS MAY NOT BE UTILIZED ON THIS SPECIFIC PROJECT. PIPING AND EQUIPMENT LEGEND APPLIES TO P&ID SHEETS.
4. PIPING AND EQUIPMENT LEGEND APPLIES TO P&ID SHEETS ONLY AND MAY DIFFER FROM LEGENDS FOR OTHER SHEETS.

PIPELINE MATERIAL CODE ABBREVIATIONS

PCCP	SECTION 02612, PRESTRESSED CONCRETE CYLINDER PIPE
CBWS	SECTION 02614, CONCRETE BAR-WRAPPED, STEEL CYLINDER PIPE
LHCPP	SECTION 02616, LOW HEAD CONCRETE PRESSURE PIPE
RCP	SECTION 02618, CONCRETE PIPE
PVC	SECTION 15061, POLYVINYL CHLORIDE PIPE
DIP	SECTION 15061, DUCTILE IRON PIPE
SP	SECTION 15062, STEEL PIPE
LWS-XX	SECTION 15063, LIGHT WALL STEEL PIPE
SS-XX1	SECTION 15064, STAINLESS STEEL PIPE, TUBING, AND ACCESSORIES
CSG-XX	SECTION 15065, MISCELLANEOUS STEEL PIPE, TUBING, AND ACCESSORIES
CS-XX	SECTION 15065, MISCELLANEOUS STEEL PIPE, TUBING, AND ACCESSORIES
FRPE-XX	SECTION 15066, FIBERGLASS REINFORCED PLASTIC PIPE (EXHAUST AIR SERVICE)
FRP-XX	SECTION 15067, MISCELLANEOUS PLASTIC PIPE, TUBING, AND ACCESSORIES
PVC-XX	SECTION 15067, MISCELLANEOUS PLASTIC PIPE, TUBING, AND ACCESSORIES
CPVC-XX	SECTION 15067, MISCELLANEOUS PLASTIC PIPE, TUBING, AND ACCESSORIES
PE-XX	SECTION 15067, MISCELLANEOUS PLASTIC PIPE, TUBING, AND ACCESSORIES
PP-XX	SECTION 15067, MISCELLANEOUS PLASTIC PIPE, TUBING, AND ACCESSORIES
PVDF-XX	SECTION 15067, MISCELLANEOUS PLASTIC PIPE, TUBING, AND ACCESSORIES
RPT-XX	SECTION 15067, MISCELLANEOUS PLASTIC PIPE, TUBING, AND ACCESSORIES
TEFL-XX	SECTION 15067, MISCELLANEOUS PLASTIC PIPE, TUBING, AND ACCESSORIES
SS	SECTION 15068, AWWA STAINLESS STEEL PIPE
CI-XX	SECTION 15069, CAST IRON SOIL PIPE AND ACCESSORIES
CU-XX	SECTION 15070, COPPER TUBING AND ACCESSORIES
BR-XX	SECTION 15060, MISCELLANEOUS PIPING AND PIPE ASSEMBLY
HS-XX	SECTION 15060, MISCELLANEOUS PIPING AND PIPE ASSEMBLY
TG-XX	SECTION 15060, MISCELLANEOUS PIPING AND PIPE ASSEMBLY
CRP-XX	SECTION 15060, MISCELLANEOUS PIPING AND PIPE ASSEMBLY
HAST-X	SECTION 15060, HASTELLOY PIPE

1. **XX= numbers 01-20**

REGISTERED PROFESSIONAL ENGINEER TIMOTHY A. HOLMES 20984 9-23-11 OKLAHOMA

REVISION	BY	DATE

LOWER BIRD CREEK WWTP EXPANSION
TMUA PROJECT NO. ES 2006-01
CONTRACT 1B

GENERAL
P&ID - LEGEND AND ABBREVIATIONS
SHEET 2 OF 3

CITY OF TULSA, OKLAHOMA
TULSA METROPOLITAN UTILITY AUTHORITY
ENGINEERING SERVICES DEPARTMENT

PLANS AND ESTIMATES PREPARED BY:
BLACK & VEATCH Building a world of difference — Black & Veatch Corporation, Kansas City, Missouri
Holloway, Updike and Bellen Consulting Engineers, Muskogee · Broken Arrow
DWGATES Engineering Services

PLAN SCALE:	DRAWN	SCD		APPROVED:
	DESIGNED	SCD		
	SURVEY			
PROFILE SCALE:	FIELD MGR.	TDS	10/11	
HORIZONTAL: 1" =	SECT. MGR.			
	PROJ. MGR.	RSW	10/3/11	
VERTICAL 1" =	RECOMMENDED: HAS 10/26/11			DIRECTOR
FILE:	DRAWING: GI-2			DATE 10/28/2011
ATLAS PAGE NO:				SHEET 20 OF 261 SHEETS

9-28-11 B&V PROJECT NO. 145120

PLOTTED DATE: 9/21/2011 8:59:24 PM, Batch Plot
SAVED DATE: OGL2263; 6/13/2011 3:27:56 PM
CYGNET ID: 145120-3000-HB000R9CC

FD145120
D145120BV

PLANT DESIGNATIONS

NORTHSIDE	N
SOUTHSIDE	S
LOWER BIRD CREEK	L
HAIKEY CREEK	H

AREA DESIGNATIONS

OPERATIONS	001
MAINTENANCE	002
ADMINISTRATION	003
BAR SCREEN	010
GRIT	020
PRIMARY CLARIFIER	030
AERATION TRAINS/BLOWERS	040
FINAL CLARIFIERS	050
DISINFECTION	060
THICKENER PROCESS (DAF/GRAVITY THICKENER/RDT)	070
DIGESTER/PASTURIZATION	080
BELT PRESSES/LAGOONS	090
LIFT STATIONS	100-120s
FLOW EQUALIZATION BASIN (FEBs)	130s

BUILDING/BASIN DESIGNATIONS

ADMINISTRATION	ADM
AERATION BASIN	ARB
BASIN	BAS
BELT FILTER PRESS	BFP
BLOWER	BLO
BIOSELECTORS	BIO
BAR SCREEN	BRS
CHLORINATION	CHL
DIFFUSED AIR FLOTATION	DAF
DECHLORINATION	DCL
DIGESTER	DIG
EAST BANK JUNCTION	EBJ
EXCESS FLOW VAULT	EXF
FINAL CLARIFIER	FCL
FLOW EQUALIZATION BASIN	FEB
GRIT	GRT
HEADWORKS	HDW
LIFT STATION	LFT
MODIFIED BASIN	MDB
MAINTENANCE	MNT
OPERATIONS	OPS
PASTEURIZATION	PAS
PLANT EFFLUENT WATER	PEW
PRIMARY CLARIFIER	PCL
PIPE GALLERY	PGL
POLYMER	POL
RETURN SLUDGE PUMP STATION	RAP
ROTARY DRUM THICKENER	RDT
SLUDGE TRANSFER PUMP STATION	STP
SULFONATION	SLF
THICKENERS	THK
UV	UVR
VAULT	VLT

EQUIPMENT DESIGNATIONS

AIR BLOWER PUMP	ABP	DIFFUSER	DIF	LONGITUDINAL COLLECTOR UNIT	LCU	ROTATING WEIR	RWR
AIR BLOWER	ABR	DIGESTER	DIG	STATIONARY LADDER	LDR	SAMPLER	SAM
AIR COMPRESSOR CONTROL PANEL	ACC	DIURNAL PUMP	DIP	LIFT STATION	LFT	SUPPLIED AIR RESPIRATOR	SAR
AIR CLEANER	ACL	DIFFERENTIAL LEVEL CONTROL	DLC	LEVEL CONTROLLER	LLC	SATURATION TANK	SAT
AIR COMPRESSOR	ACM	D. O. METER	DOM	LIMITORQUE	LMT	SUBMERSIBLE PUMP	SBM
AIR CONTROL PANEL	ACP	DOOR OPENER	DOR	LOCK OUT/TAG OUT	LOC	SOLUTION BOOSTER PUMP	SBP
VALVE ACTUATOR	ACT	DIURNAL BASIN	DRN	LOUVER	LVR	SLUDGE BLEND TANK	SBT
AIR CONDITIONER UNIT	ACU	DIGESTER RELIEF VALVE	DRV	MANOMETER	MAN	SCBA	SCB
AIR DIFFUSER	ADF	AIR DRYER	DRY	MAKE-UP AIR UNIT	MAU	SCADA	SCD
ADMINISTRATION	ADM	DEWATERING PUMP	DWP	MAIN BELT DRIVE	MBD	SCALES	SCA
AERATOR	AER	EMERGENCY CHLORINE SCRUBBER	ECS	MOTOR CONTROL CENTER	MCC	SECONDARY CLARIFIER	SCL
AUTOMATED FREQUENCY DRIVE	AFD	EMERGENCY ESCAPE PACK	EEP	MODIFIED BASIN	MDB	SCUM PUMP	SCP
AUTO GREASE PUMP	AGP	EYEWASH/EMERGENCY SHOWER	EES	MANHOLE	MNH	SCREW PUMP	SCR
AIR HANDLING UNIT	AHU	EFFLUENT	EFF	MAINTENANCE	MNT	SEDIMENT TRAP	SDT
ALARM	ALA	EFFLUENT PUMP	EFP	MOTORIZED ROTATING SCUM PIPE	MSP	SECURITY SYSTEM	SEC
ANALYZER	ANL	EXHAUST FAN	EHF	METER	MTR	SEWAGE EJECTOR PUMP	SEN
ANODE	ANO	EJECTOR	EJT	MICROWAVE	MWV	SEPTIC WASTE	SEP
AERATION BASIN	ARB	EXTENSION LADDER	ELD	MIXER	MXR	SLUDGE FEED PUMP	SFP
AIR RECEIVING TANK	ART	EMERGENCY LIGHTS	ELT	NON-POTABLE WATER PUMP	NPP	SO2 FEED SYSTEM	SFS
AIR RELIEF VALVE	ARV	ELEVATOR	ELV	ODOR CONTROL DAMPER	OCD	SLUICE GATE	SGT
AIR SUPPLY FAN	ASF	ENGINE	ENG	ODOR CONTROL FAN	OCF	SLUDGE HEAT EXCHANGER	SHE
SCUM WEIR	BAF	EQUIPMENT	EQP	OIL CONTAINMENT PIT	OCN	SILO	SIL
BAROMETER	BAR	EMERGENCY REPAIR KIT	ERK	ODOR CONTROL SCRUBBER	OCS	SEWAGE INJECTOR PUMP	SIP
BASIN	BAS	EMERGENCY ROOF VENTILATOR	ERV	OVERHEAD DOOR	OHD	SKIMMER	SKM
BASIN DISTRIBUTION BOX	BDB	ECO-THERM REACTIONS	ETR	OPERATIONS	OPS	STEP LADDER	SLD
BASIN DRAIN	BDR	EVAPORATOR	EVP	OUTFALL	OUT	SULFONATION	SLF
BACK FLOW PREVENTER	BFL	EXCESS FLOW FACILITY	EXF	PASTEURIZATION	PAS	SILENCER	SNL
BELT FILTER PRESS	BFP	FIRE EXTINGUISHER	EXT	POLYMER BLEND UNIT	PBU	SENSOR	SNS
BIOSELECTORS	BIO	FAN	FAN	PRIMARY CLARIFIER	PCL	SET POINT CONTROL	SPC
BUILDING	BLDG	FLAME ARRESTER	FAR	POLYMER FEED PUMP	PFP	SEPARATOR	SPR
BLOWER	BLO	FINAL CLARIFIER	FCL	POLYMER FEED SYSTEM	PFS	SO2 PACING SYSTEM	SPS
BUILDING LIGHTS	BLT	FINAL CLARIFIER VALVE	FCV	PORTABLE GAS DETECTOR	PGD	SLUDGE PUMP TIMER	SPT
BOILER	BOL	FEEDER	FDR	PIPE GALLERY	PGL	SLUDGE RECIRCULATION PUMP	SRP
BURNER	BRN	FIRE HYDRANT	FHD	SCUM PIT	PIT	SO2 SOLUTION PUMP	SSP
BAR SCREEN	BRS	FLOCCULATOR	FLC	POLYMER STOCK PUMP	PKP	SLUDGE TRANSFER PUMP	STP
BOOSTER PUMP	BSP	FLUME	FLM	PROGRAMMABLE LOGIC CONTROLLER	PLC	STRAINER	STR
BUBBLER	BUB	FLOAT	FLO	PLANT LIGHTS	PLT	SUMP PUMP	SUP
COMPRESSED AIR SYSTEM	CAS	FLOCCULATOR PANEL	FLP	POLYMER SOLUTION PUMP	PLY	SEPTIC VALVE	SVL
CARBON ABSORPTION SYSTEM	CAU	FILTER	FLT	PUMP	PMP	STORMWATER PUMP	SWP
CHAMBER BYPASS	CBP	FORCE MAIN	FMN	POTABLE WATER METER	PMW	SWITCHGEAR	SWT
COVERED BASIN	CBS	FLOW METER	FMT	POLYMER MIXER	PMX	TRICKLING FILTER CHLORINE	TRC
CARBON CANISTER UNIT	CCU	FINE SCREEN	FSC	PNEUMATIC CONTROL	PNC	GRAVITY THICKENERS	THK
CLARIFIER DRIVE UNIT	CDU	FIRE SPRINKLER SYSTEM	FSS	PANEL	PNL	TILTING WEIR	TLW
CHEMICAL FEED PUMP	CFP	FLOW TUBE	FTB	POTASSIUM PERMANGANATE SYSTEM	PPS	THERMOMETER	TMP
CHEMICAL FEED SYSTEM	CFS	GATE	GAT	PROBE	PRB	TANK	TNK
CHLORINATION	CHL	GRAVITY DRIVE UNIT	GDU	PRESSURE RECYCLE PUMP	PRP	TRANSFORMER	TRN
CHEMICAL INJECTION PUMP	CIP	GENERATOR	GEN	PRESSURE SWITCH	PRS	TRAP	TRP
GRIT CLASSIFIER	CLA	GRIT ESCALATOR	GES	POWER ROOF VENTILATOR	PRV	TILTING WEIR	TRW
CHLORINE FEED SYSTEM	CLF	GAS MIXING COMPRESSOR	GMC	PRESSURE SWITCH OPERATION	PSO	THICKENED SLUDGE PUMP	TSP
COVER LEVEL INDICATOR	CLI	GRINDER	GRD	PRIMARY SLUDGE PUMP	PSP	VACUUM PUMP	VCP
COOLING WATER PUMP	CLP	GRIT	GRT	PRESSURE TRANSMITTER	PTM	VACUUM VALVE	VCV
CONTROL	CNT	GAS STORAGE COMPRESSOR	GSC	POLYMER TRANSFER PUMP	PTP	VEHICLE	VEH
CONVEYOR	CNV	GAS STORAGE SPHERE	GSS	PLANT WATER PUMP	PWP	VARIABLE FREQUENCY DRIVE	VFD
COLLECTOR	COL	GRIT SETTLING TANK	GST	RETURN SLUDGE PUMP	RAP	VAULT	VLT
CONTROLLER	CON	GRIT UNIT	GTU	ROTOR AERATOR	RAR	VALVE	VLV
CHLORINE SOLUTION PUMP	CSP	HEAT & A/C UNIT	HAU	RECIRCULATING PUMP	RCP	VALVE OPERATOR	VOP
CHILLED WATER PUMP	CWP	HOPPER	FPR	ROTATING DRUM THICKENER	RDT	WATER BOOST PUMP	WBP
CHILLED WATER UNIT	CWU	HEAT RECOVERY EXCHANGER	HRE	REDUCER	RDU	WASHER/COMPACTOR	WCP
DIFFUSED AIR FLOATATION	DAF	HEAT RECOVERY SILENCER	HRS	RECORDER	REA	WELL	WEL
DRYING BEDS	DBD	HOIST	HST	UV REACTOR	REC	WELDER	WLD
DITCH DRIVE UNIT	DDU	HEATER UNIT	HTR	REGULATOR	REG	WASTE SLUDGE PUMP	WSP
DEHUMIDIFIER	DEH	HOT WATER HEATER	HWH	RETURN FLOW PUMP	RFP	WET WELL PUMP	WWP
DETECTOR	DET	HEATED WATER PUMP	HWP	SAMPLE REFRIGERATOR	RFR	VENT HOOD	VNT
DRINKING FOUNTAIN	DFN	ICE MAKER	ICE	RAW SEWAGE PUMP	RSP		
DIFFUSED AIR FLOATATION UNIT	DFU	INDUCTOR	IND	RUPTURE DISC	RUP		
DIGESTER GAS METER	DGM						

PIPELINE SYSTEM CODE ABBREVIATIONS

ACETIC ACID	ACE	FLOCCULATION	FLC	RESIDUALS	RES
ACETYLENE	ACT	GASEOUS OXYGEN	GOX	RETURN ACTIVATED SLUDGE	RAS
ACTIVATED CARBON - GRANULAR	GAC	GASOLINE	GSL	REVERSE OSMOSIS	ROS
AERATION AIR/PROCESS AIR	AIR	GREASE	GRS	SCREENINGS	SCR
AERATION SYSTEM	AER	GRIT	GRT	SECONDARY CLARIFICATION	SCL
AIR WASH	ARW	HELIUM	HEL	SECONDARY SCUM	SSC
ALUMINUM SULFATE	ALS	HYDRAULIC FLUID	HFL	SEPTAGE	SEP
AMMONIUM SULFATE	NSO4	HYDROCHLORIC ACID	HCL	SETTLED WATER	SET
ANHYDROUS AMMONIA	NH3	HYDROFLUOSILIC ACID	HFS	SEWAGE	SEW
ANTI-SEALANT	AS	HYDROGEN	HYD	SODA ASH	NAC
AQUA AMMONIA	NHOH	HYDROGEN PEROXIDE	PER	SODIUM ALUMINATE	NAL
ARGON	ARG	INCINERATION	INC	SODIUM ALUMINATE	NAM
ASH	ASH	INFLUENT PUMPING	INFP	SODIUM BICARBONATE	NBC
BACKWASH - MEMBRANE/FILTER	BWH	INTAKE	INT	SODIUM BISULFITE	NHS
BALLASTED FLOCCULATION	BAL	LAGOON STORAGE	LAG	SODIUM CHLORIDE	NCL
BIOSOLIDS	BIO	LAND APPLICATION	LAP	SODIUM CHLORITE	NCL2
BIOTOWER	BIT	LIME - HYDRATED	CAH	SODIUM FLUORIDE	NAF
BLENDED SLUDGE	BLS	LIME - QUICKLIME	CAO	SODIUM HEXAMETAPHOSPHATE	NAX
BNR	BNR	LIME STABILIZATION	LIM	SODIUM HYDROXIDE	NAOH
BRINE	BRN	LIQUID OXYGEN	LOX	SODIUM HYPOCHLORITE	NOCL
CALCIUM HYPOCHLORITE	CACL	LP GAS OR PROPANE GAS	LPG	SODIUM SILICOFLUORIDE	NASF
CALCIUM THIOSULFATE	CATS	MAGNESIUM HYDROXIDE	MGOH	STEAM	STM
CARBON DIOXIDE	CO2	MEMBRANE	MEM	STORM SEWER	STS
CARBON SLURRY	CAS	METHANE GAS	MEG	STORM WATER	STW
CARBONIC ACID	HCO3	METHANOL	MTH	SULFUR DIOXIDE	SO2
CENTRATE	CEN	MIXED LIQUOR	MXL	SULFURIC ACID	HSO4
CHEMICAL ENHANCED BACKWASH - MEMBRANE	CEB	NATURAL GAS	NG	SURFACE WASH	SW
CHLORINE	CL2	NITROGEN	NIT	TERTIARY TREATMENT	TERT
CHLORINE DIOXIDE	CLO2	NITROUS OXIDE	NIO	THICKENED PRIMARY SLUDGE	TPRS
CITRIC ACID	CA	ODOR CONTROL	ODC	THICKENED WASTE ACTIVATED SLUDGE	TWAS
CLEAN IN PLACE	CIP	OIL	OIL	THICKENING	THCK
COAGULATION	COA	OIL - FUEL	FO	TREATED WATER	TW
COMPRESSED AIR - INSTRUMENT	CAI	OZONE	OZN	TRICKLING FILTER	TF
COMPRESSED AIR - SERVICE	CMS	OZONE DESTRUCT	OZD	ULTRAVIOLET	UV
COPPER SULFATE	CUS	PHOSPHATE	PPP	VACUUM	VAC
CORROSION INHIBITOR	CI	PHOSPHORIC ACID	PO4	WASH WATER	WW
DECHLORINATION	DCL	POLYALUMINUM CHLORIDE	PCL	WASTE ACTIVATED SLUDGE	WAS
DETERGENT	DET	POLYMER	POLF	WASTE WASH WATER	WWW
DEWATERING	DWT	POTASSIUM PERMANGANATE	KMN	WATER - CONDENSATE	CDW
DIESEL FUEL	FUE	POWDERED ACTIVATE CARBON	PAC	WATER - COOLING	COLW
DIGESTER GAS	DGG	PRE-AERATION	PAR	WATER - DISTILLED WATER	DW
DIGESTER GAS MIXING	DGM	PRESEDIMENTATION	PSD	WATER - FIRE	FW
DIGESTER SLUDGE	DGS	PRIMARY CLARIFICATION	PRC	WATER - IRRIGATION	IRW
DIGESTION - AEROBIC	DGA	PRIMARY SCUM	PSC	WATER - OZONATED	OZW
DIGESTION - ANAEROBIC	DIG	PRIMARY SLUDGE	PRS	WATER - SEAL	SWT
DISINFECTION CONTACT BASIN	DCB	RAW WASTEWATER PUMPING	WWP	WATER - WATER HEATING	HW
DISSOLVED AIR FLOTATION	DAF	RAW WATER PUMPING	RWP	WATER DEIONIZED	DEIW
DRAINAGE	DRN	RAW WATER STORAGE	RWS	WATER NON-POTABLE	NPW
EFFLUENT PUMPING	EFP	RECIRCULATED SLUDGE	RCS	WATER PLANT EFFLUENT	PEW
ENGINE EXHAUST	EXH	RECLAIMED WATER	RCW	WATER POTABLE	PW
EQUALIZATION BASIN	EQB	REFRIGERANT	REF	WATER RAW	RW
FERRIC CHLORIDE	FEC			WET WEATHER TREATMENT	WWT
FERRIC SULFATE	FES			ZINC ORTHOPHOSPHATE	ZOP
FERROUS CHLORIDE	FRC				
FERROUS SULFATE	FRS				
FILTRATION	FLT				

LOWER BIRD CREEK WWTP EXPANSION
TMUA PROJECT NO. ES 2006-01
CONTRACT 1B

GENERAL
P&ID - LEGEND AND ABBREVIATIONS
SHEET 3 OF 3

CITY OF TULSA, OKLAHOMA
TULSA METROPOLITAN UTILITY AUTHORITY
ENGINEERING SERVICES DEPARTMENT

PLANS AND ESTIMATES PREPARED BY:

BLACK & VEATCH Building a world of difference. — Black & Veatch Corporation, Kansas City, Missouri
Holloway, Updike and Ballen — Consulting Engineers, Muskogee · Broken Arrow
DWGATES Engineering Services

REGISTERED PROFESSIONAL ENGINEER — TIMOTHY A. HOLWEGER — 20954 — 9-23-11 — OKLAHOMA

REVISION	BY	DATE

PLAN SCALE:	DRAWN	SCD		APPROVED:
	DESIGNED	SCD		
	SURVEY			
PROFILE SCALE:	FIELD MGR.	TDS	10/11	
HORIZONTAL: 1" =	SECT. MGR.			
	PROJ. MGR.	TAH	10/31/11	
VERTICAL 1" =	RECOMMENDED: HAS 10/26/11			DIRECTOR
FILE:	DRAWING: GI-3			DATE 10/28/2011
ATLAS PAGE NO:				SHEET 21 OF 261 SHEETS

B&V PROJECT NO. 145120

PLOTTED DATE: 9/21/2011 8:59:38 PM, Batch Plot
SAVED DATE: Oct.22631; 6/13/2011 3:39:10 PM
CYGNET ID: 145120-3000--B0000R99CD

FD145120
D145120BV

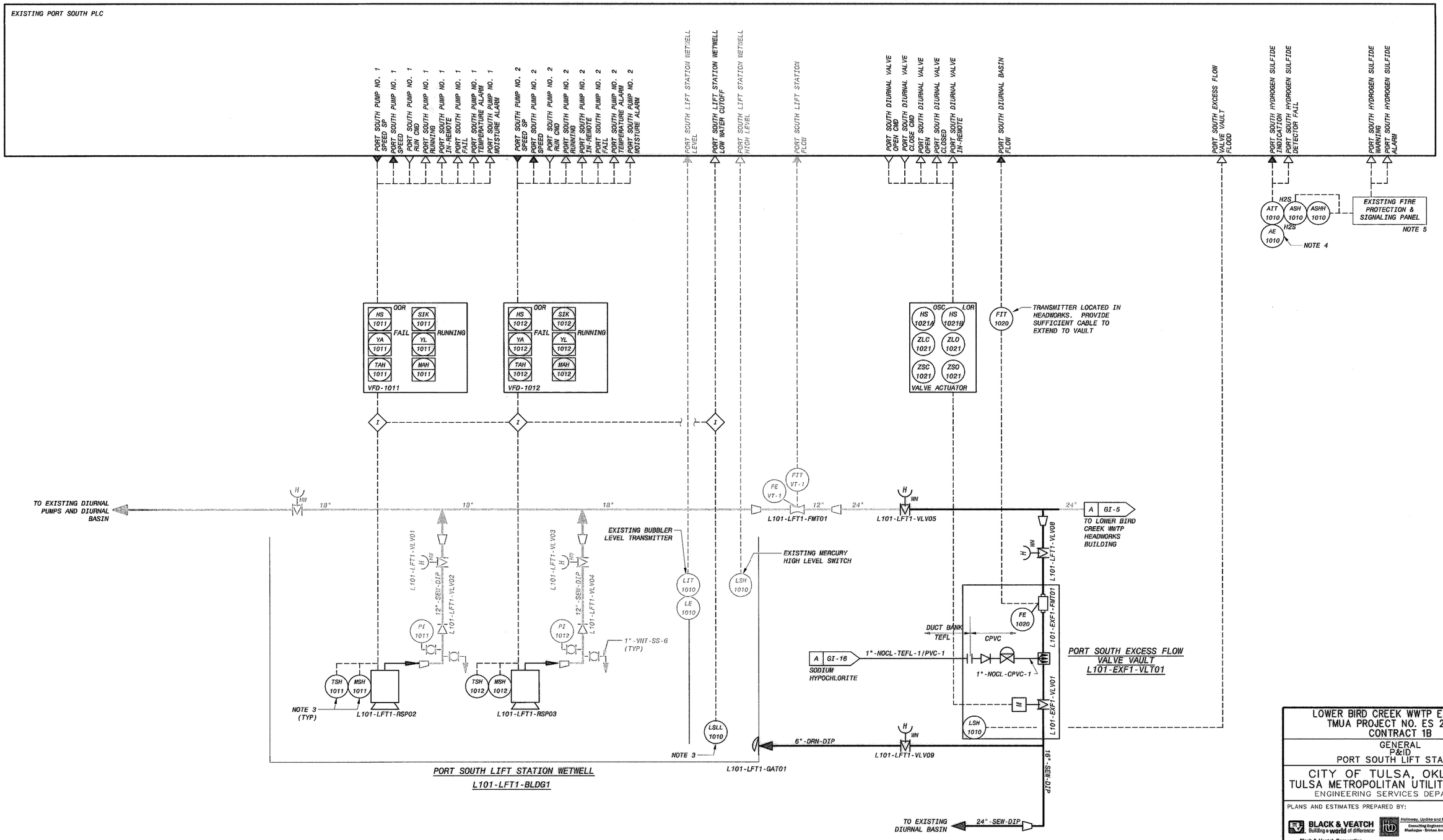

NOTES:
1. SEE LEGEND ON DRAWINGS GI-1, GI-2 AND GI-3.
2. LOCAL CONTROL DEVICES SUCH AS INDICATING LIGHTS AND SWITCHES, LOCATED ON MCCs OR AT EQUIPMENT, MAY NOT BE INDICATED ON THIS P&ID.
3. INSTRUMENTATION PROVIDED UNDER SPECIFICATION SECTION 11150.
4. MOUNT SENSOR AT 5 FEET ABOVE GRADE.
5. LOCAL GAS DETECTION INDICATION AND ALARM PROVIDED BY THE FIRE ALARM CONTROL PANEL.

REGISTERED PROFESSIONAL ENGINEER TIMOTHY A. HOLMES 20864 9-23-11 OKLAHOMA

REVISION	BY	DATE

LOWER BIRD CREEK WWTP EXPANSION
TMUA PROJECT NO. ES 2006-01
CONTRACT 1B

GENERAL
P&ID
PORT SOUTH LIFT STATION

CITY OF TULSA, OKLAHOMA
TULSA METROPOLITAN UTILITY AUTHORITY
ENGINEERING SERVICES DEPARTMENT

PLANS AND ESTIMATES PREPARED BY:
BLACK & VEATCH Building a world of difference. Black & Veatch Corporation Kansas City, Missouri
Holloway, Updike and Bellen Consulting Engineers Muskogee · Broken Arrow
DWGATES Engineering Services

PLAN SCALE:	DRAWN	SCD		APPROVED:
	DESIGNED	SCD		
	SURVEY			
PROFILE SCALE:	FIELD MGR.	TDS	6/11	
HORIZONTAL: 1" =	SECT. MGR.			
	PROJ. MGR.	RAW	10/31/11	
VERTICAL 1" =	RECOMMENDED: HAS 10/26/11			DIRECTOR
FILE:	DRAWING: GI-4			DATE 10/28/2011
ATLAS PAGE NO:				SHEET 22 OF 261 SHEETS

HAS 9-28-11 B&V PROJECT NO.145120

PLOTTED DATE: 9/21/2011 8:59:52 PM, Batch Plot
SAVED DATE: KERK3024, 9/21/2011 4:52:25 PM
CYGNET ID: 145120-3000-I-B000RJV1

FD145120
D145120BV

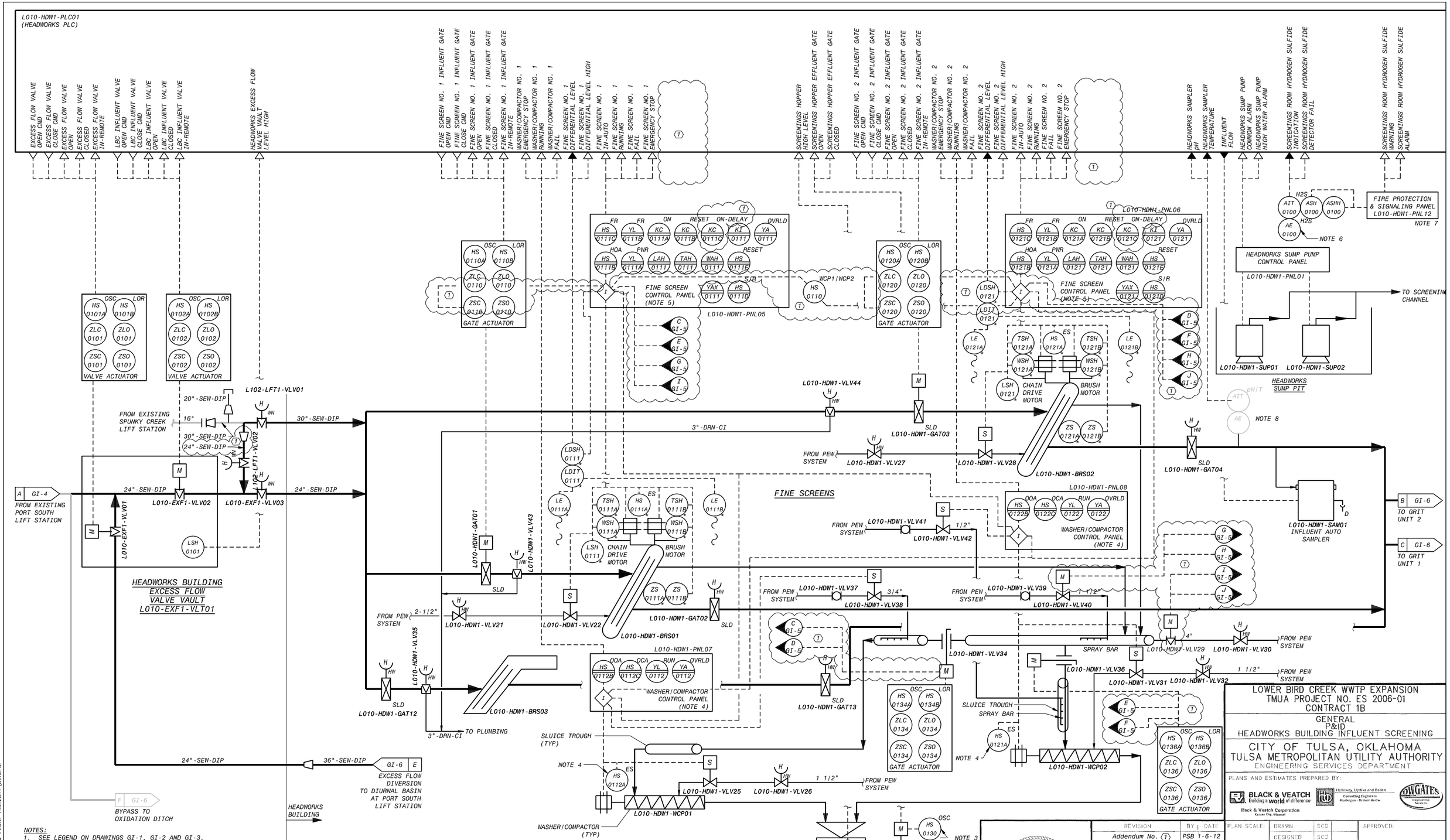
L010-HDW1-PLC01
(HEADWORKS PLC)
EXCESS FLOW VALVE OPEN CMD
EXCESS FLOW VALVE CLOSE CMD
EXCESS FLOW VALVE OPEN
EXCESS FLOW VALVE CLOSED
EXCESS FLOW VALVE IN-REMOTE
LBC INFLUENT VALVE OPEN CMD
LBC INFLUENT VALVE CLOSE CMD
LBC INFLUENT VALVE OPEN
LBC INFLUENT VALVE CLOSED
LBC INFLUENT VALVE IN-REMOTE
HEADWORKS EXCESS FLOW VALVE VAULT LEVEL HIGH
FINE SCREEN NO. 1 INFLUENT GATE OPEN CMD
FINE SCREEN NO. 1 INFLUENT GATE CLOSE CMD
FINE SCREEN NO. 1 INFLUENT GATE OPEN
FINE SCREEN NO. 1 INFLUENT GATE CLOSED
FINE SCREEN NO. 1 INFLUENT GATE IN-REMOTE
WASHER/COMPACTOR NO. 1 EMERGENCY STOP
WASHER/COMPACTOR NO. 1 RUNNING
WASHER/COMPACTOR NO. 1 FAIL
FINE SCREEN NO. 1 DIFFERENTIAL LEVEL
FINE SCREEN NO. 1 DIFFERENTIAL LEVEL HIGH
FINE SCREEN NO. 1 IN-AUTO
FINE SCREEN NO. 1 RUNNING
FINE SCREEN NO. 1 FAIL
FINE SCREEN NO. 1 EMERGENCY STOP
SCREENINGS HOPPER HIGH LEVEL
SCREENINGS HOPPER EFFLUENT GATE OPEN
SCREENINGS HOPPER EFFLUENT GATE CLOSED
FINE SCREEN NO. 2 INFLUENT GATE OPEN CMD
FINE SCREEN NO. 2 INFLUENT GATE CLOSE CMD
FINE SCREEN NO. 2 INFLUENT GATE OPEN
FINE SCREEN NO. 2 INFLUENT GATE CLOSED
FINE SCREEN NO. 2 INFLUENT GATE IN-REMOTE
WASHER/COMPACTOR NO. 2 EMERGENCY STOP
WASHER/COMPACTOR NO. 2 RUNNING
WASHER/COMPACTOR NO. 2 FAIL
FINE SCREEN NO. 2 DIFFERENTIAL LEVEL
FINE SCREEN NO. 2 DIFFERENTIAL LEVEL HIGH
FINE SCREEN NO. 2 IN-AUTO
FINE SCREEN NO. 2 RUNNING
FINE SCREEN NO. 2 FAIL
FINE SCREEN NO. 2 EMERGENCY STOP
HEADWORKS SAMPLER OFF
HEADWORKS SAMPLER TEMPERATURE
INFLUENT FLOW
HEADWORKS SUMP PUMP COMMON ALARM
HEADWORKS SUMP PUMP HIGH WATER ALARM
SCREENINGS ROOM HYDROGEN SULFIDE INDICATION
SCREENINGS ROOM HYDROGEN SULFIDE WARNING
SCREENINGS ROOM HYDROGEN SULFIDE DETECTOR FAIL
SCREENINGS ROOM HYDROGEN SULFIDE WARNING
SCREENINGS ROOM HYDROGEN SULFIDE ALARM
FIRE PROTECTION & SIGNALING PANEL L010-HDW1-PNL12
NOTE 7
NOTE 6
HEADWORKS SUMP PUMP CONTROL PANEL
L010-HDW1-PNL01
TO SCREENING CHANNEL
L010-HDW1-SUP01
L010-HDW1-SUP02
HEADWORKS SUMP PIT
NOTE 8
L010-HDW1-PNL06
FINE SCREEN CONTROL PANEL (NOTE 5)
L010-HDW1-PNL05
GATE ACTUATOR
VALVE ACTUATOR
L102-LFT1-VLV01
L102-LFT1-VLV02
FROM EXISTING SPUNKY CREEK LIFT STATION
20"-SEW-DIP
16"
30"-SEW-DIP
24"-SEW-DIP
FROM EXISTING PORT SOUTH LIFT STATION
L010-EXF1-VLV01
L010-EXF1-VLV02
L010-EXF1-VLV03
HEADWORKS BUILDING EXCESS FLOW VALVE VAULT L010-EXF1-VLT01
L010-HDW1-VLV44
L010-HDW1-GAT03
L010-HDW1-VLV27
L010-HDW1-VLV28
L010-HDW1-BRS02
L010-HDW1-GAT04
L010-HDW1-SAM01 INFLUENT AUTO SAMPLER
TO GRIT UNIT 2
TO GRIT UNIT 1
FINE SCREENS
L010-HDW1-PNL08
WASHER/COMPACTOR CONTROL PANEL (NOTE 4)
L010-HDW1-VLV41
L010-HDW1-VLV42
L010-HDW1-GAT01
L010-HDW1-VLV43
L010-HDW1-VLV37
L010-HDW1-VLV38
L010-HDW1-VLV39
L010-HDW1-VLV40
L010-HDW1-VLV21
L010-HDW1-VLV22
L010-HDW1-GAT02
L010-HDW1-BRS01
L010-HDW1-VLV35
L010-HDW1-GAT12
L010-HDW1-BRS03
L010-HDW1-PNL07
L010-HDW1-GAT13
L010-HDW1-VLV34
L010-HDW1-VLV29
L010-HDW1-VLV30
L010-HDW1-VLV36
L010-HDW1-VLV31
L010-HDW1-VLV32
L010-HDW1-WCP02
L010-HDW1-VLV25
L010-HDW1-VLV26
L010-HDW1-WCP01
L010-HDW1-GAT10
L010-HDW1-HPR01
SCREENINGS HOPPER
TO DUMP TRUCK
TO PLUMBING
3"-DRN-CI
SLUICE TROUGH
SPRAY BAR
CHAIN DRIVE MOTOR
BRUSH MOTOR
WASHER/COMPACTOR (TYP)
SLUICE TROUGH (TYP)
FROM PEW SYSTEM
EXCESS FLOW DIVERSION TO DIURNAL BASIN AT PORT SOUTH LIFT STATION
BYPASS TO OXIDATION DITCH
HEADWORKS BUILDING
36"-SEW-DIP
NOTES:
1. SEE LEGEND ON DRAWINGS GI-1, GI-2 AND GI-3. FOR DRAWING CLARITY, VALVE TAG NUMBERS ONLY SHOW THE SEQUENCE NUMBER UNLESS OTHERWISE NOTED.
2. LOCAL CONTROL DEVICES SUCH AS INDICATING LIGHTS AND SWITCHES, LOCATED ON MCCs OR AT EQUIPMENT, MAY NOT BE INDICATED ON THIS P&ID.
3. INSTRUMENTATION PROVIDED UNDER SPECIFICATION SECTION 14998.
4. INSTRUMENTATION PROVIDED UNDER SPECIFICATION SECTION 11325.
5. INSTRUMENTATION PROVIDED UNDER SPECIFICATION SECTION 11312. INSTRUMENTATION MARKED WITH AN ASTERISK (*) ALSO PROVIDED UNDER THIS SECTION.
6. MOUNT SENSOR AT 5 FEET ABOVE GRADE.
7. LOCAL GAS DETECTION INDICATION AND ALARM PROVIDED BY THE FIRE ALARM CONTROL PANEL.
8. EXISTING AND RELOCATED FROM OXIDATION DITCH.
PLOTTED DATE:
SAVED DATE: SCH42738, 5/3/2012 2:15:22 PM
CYONET ID: PW FLDR: 145120...\General
ED145120
D145120BV.
LOWER BIRD CREEK WWTP EXPANSION
TMUA PROJECT NO. ES 2006-01
CONTRACT 1B
GENERAL
P&ID
HEADWORKS BUILDING INFLUENT SCREENING
CITY OF TULSA, OKLAHOMA
TULSA METROPOLITAN UTILITY AUTHORITY
ENGINEERING SERVICES DEPARTMENT
PLANS AND ESTIMATES PREPARED BY:
BLACK & VEATCH
Building a world of difference.
Black & Veatch Corporation
Kansas City, Missouri
Hollaway, Updike and Bollen
Consulting Engineers
Muskegon - Broken Arrow
OWGATES
Engineering Services
REVISION
Addendum No. 1
BY
PSB
DATE
1-6-12
REGISTERED PROFESSIONAL ENGINEER
TIMOTHY A. HOLMES
20954
9-23-11
OKLAHOMA
PLAN SCALE:
DRAWN
SCD
DESIGNED
SCD
SURVEY
PROFILE SCALE:
FIELD VGR.
10/11
HORIZONTAL:
SECT. VGR.
PROJ. MGR.
10/5/11
VERTICAL
RECOMMENDED:
HAS 10/26/11
APPROVED:
DIRECTOR
FILE:
DRAWING: GI-5
DATE 10/25/2011
ATLAS PAGE NO:
SHEET 23 OF 261 SHEETS
B&V PROJECT NO. 145120

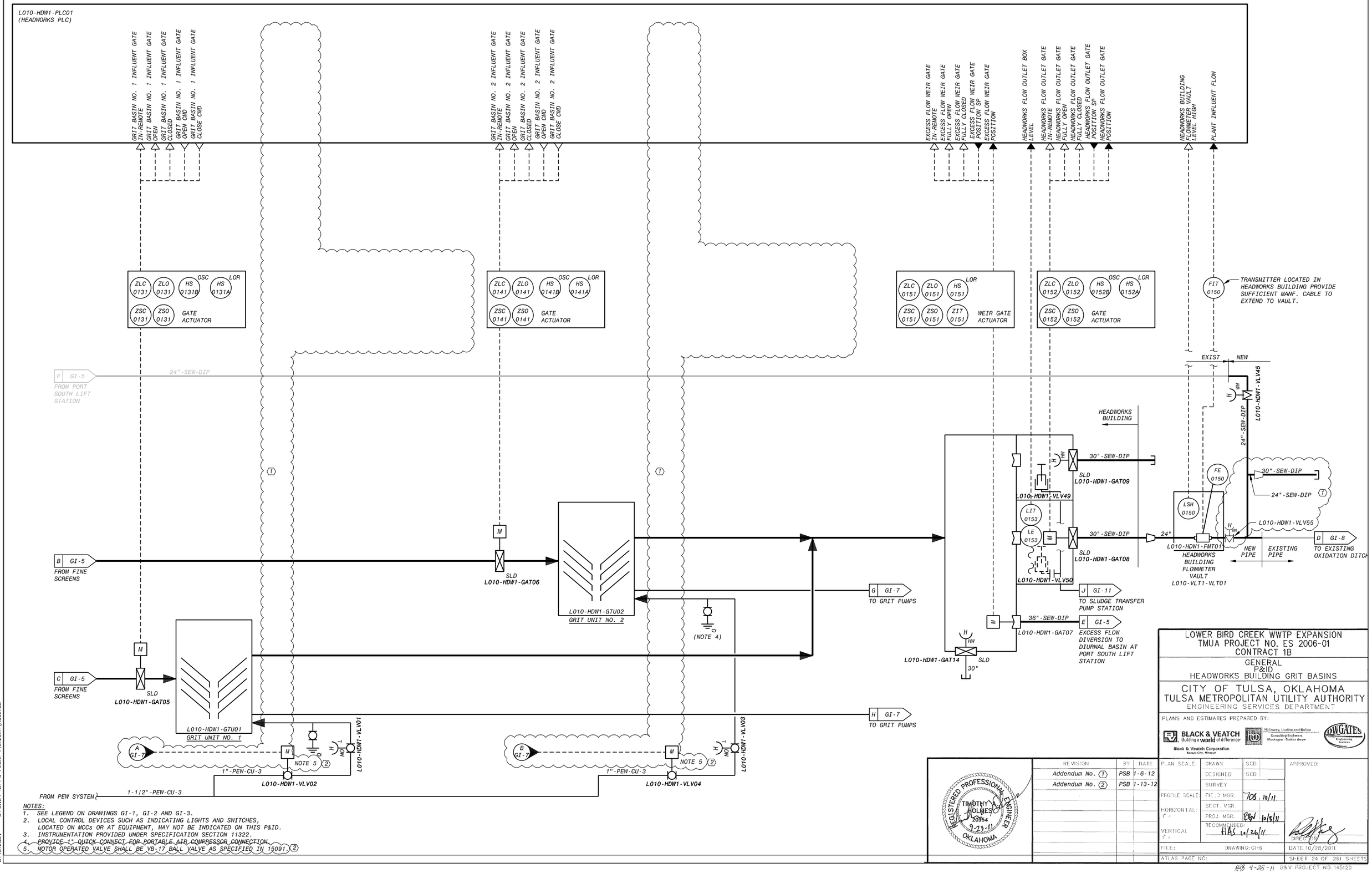

NOTES:
1. SEE LEGEND ON DRAWINGS GI-1, GI-2 AND GI-3.
2. LOCAL CONTROL DEVICES SUCH AS INDICATING LIGHTS AND SWITCHES, LOCATED ON MCCs OR AT EQUIPMENT, MAY NOT BE INDICATED ON THIS P&ID.
3. INSTRUMENTATION PROVIDED UNDER SPECIFICATION SECTION 11322.
4. PROVIDE 1" QUICK CONNECT FOR PORTABLE AIR COMPRESSOR CONNECTION.
5. MOTOR OPERATED VALVE SHALL BE VB-17 BALL VALVE AS SPECIFIED IN 15091. (2)

REGISTERED PROFESSIONAL ENGINEER TIMOTHY A. HOLMES 20954 9-23-11 OKLAHOMA

REVISION	BY	DATE
Addendum No. (1)	PSB	1-6-12
Addendum No. (2)	PSB	1-13-12

LOWER BIRD CREEK WWTP EXPANSION
TMUA PROJECT NO. ES 2006-01
CONTRACT 1B

GENERAL
P&ID
HEADWORKS BUILDING GRIT BASINS

CITY OF TULSA, OKLAHOMA
TULSA METROPOLITAN UTILITY AUTHORITY
ENGINEERING SERVICES DEPARTMENT

PLANS AND ESTIMATES PREPARED BY:
BLACK & VEATCH Building a world of difference. Black & Veatch Corporation Kansas City, Missouri
Holloway, Hudson and Batten Consulting Engineers Muskogee · Broken Arrow
OWGATES Engineering Services

PLAN SCALE:	DRAWN	SCD	APPROVED:
	DESIGNED	SCD	
	SURVEY		
PROFILE SCALE:	FIELD MGR.	TOS 10/11	
HORIZONTAL: 1" =	SECT. MGR.		
	PROJ. MGR.	PSB 10/3/11	
VERTICAL 1" =	RECOMMENDED:	HAS 10/26/11	DIRECTOR
FILE:	DRAWING: GI-6		DATE 10/28/2011
ATLAS PAGE NO:			SHEET 24 OF 261 SHEETS

PSB 9-26-11 B&V PROJECT NO. 145120

PLOTTED DATE: GLA10863, 1/12/2012 3:26:40 PM
SAVED DATE: SCH42738, 5/3/2012 1:56:50 PM
CVONET ID: PW FLDR: 145120... \vsbenso

FD145120
D145120BV

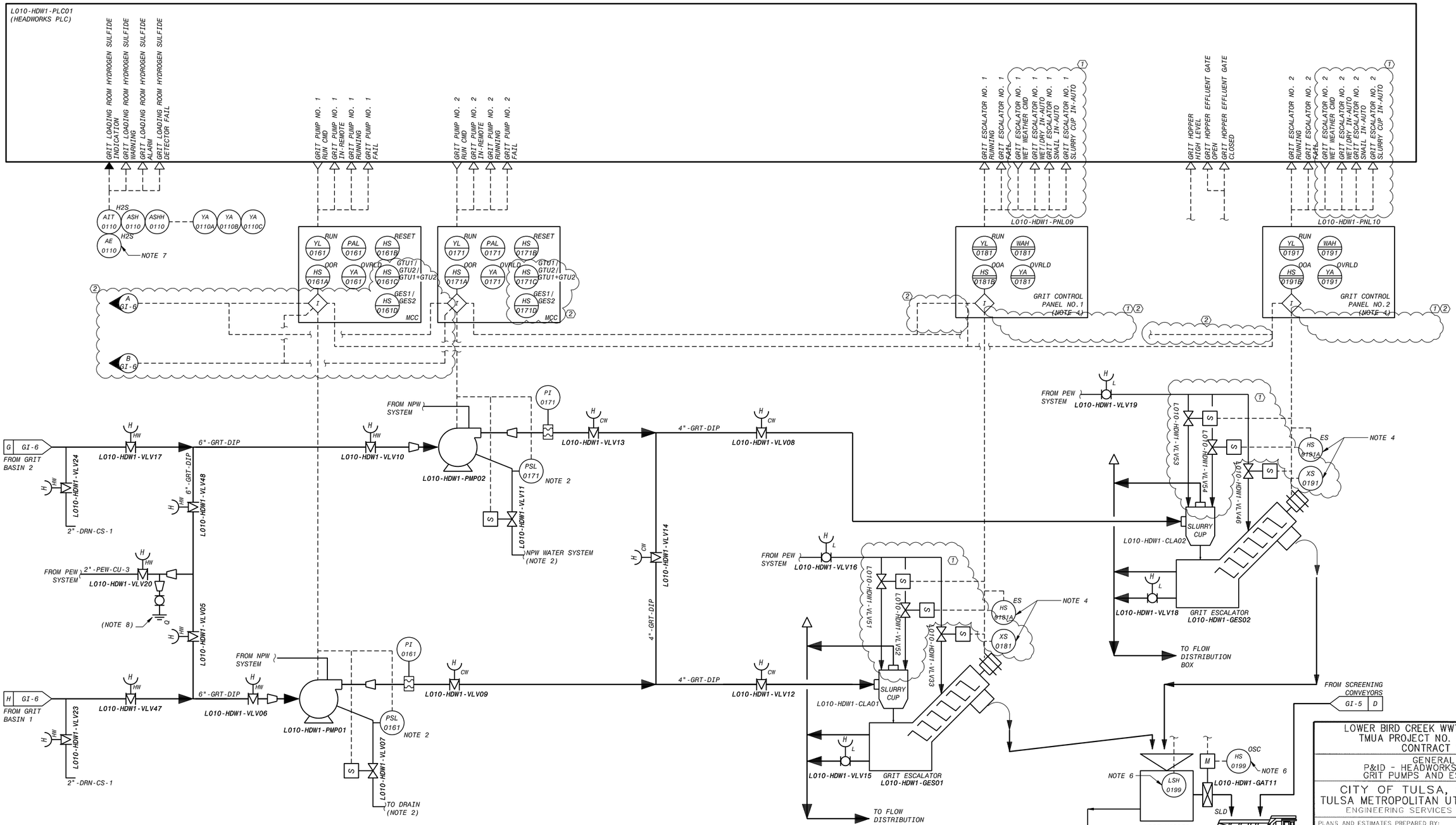

NOTES:

1. SEE LEGEND ON DRAWINGS GI-1, GI-2 AND GI-3.
2. SEE THE SEAL WATER SYSTEM DETAILS IN THE SEAL WATER STATION SPECIFICATION FOR FURTHER SEAL WATER VALVE AND PIPING REQUIREMENTS. INSTRUMENT PROVIDED UNDER SECTION 15499.
3. LOCAL CONTROL DEVICES SUCH AS INDICATING LIGHTS AND SWITCHS, LOCATED ON MCCs OR AT EQUIPMENT, MAY NOT BE INDICATED ON THIS P&ID.
4. INSTRUMENTATION PROVIDED UNDER SPECIFICATION SECTION 11322. SEE SPECIFICATION FOR ADDITIONAL CONTROL PANEL INSTRUMENTATIION.
5. INSTRUMENTATION PROVIDED UNDER SPECIFICATION SECTION 14552.
6. INSTRUMENTATION PROVIDED UNDER SPECIFICATION SECTION 14998.
7. MOUNT SENSOR AT 5 FEET ABOVE GRADE.
8. PROVIDE 1" QUICK CONNECT FOR PORTABLE AIR COMPRESSOR.

PLOTTED DATE: GLA10863, 1/12/2012 3:24:49 PM
SAVED DATE: SCH42738, 5/3/2012 1:59:38 PM
CTONET ID:-PW FLDR: 145120...\Webenso

E0145120
D145120BV

REGISTERED PROFESSIONAL ENGINEER
TIMOTHY HOLMES
20954
9-23-11
OKLAHOMA

REVISION	BY	DATE
Addendum No. 1	PSB	1-6-12
Addendum No. 2	PSN	1-11-12

LOWER BIRD CREEK WWTP EXPANSION
TMUA PROJECT NO. ES 2006-01
CONTRACT 1B

GENERAL
P&ID - HEADWORKS BUILDING
GRIT PUMPS AND ESCALATOR

CITY OF TULSA, OKLAHOMA
TULSA METROPOLITAN UTILITY AUTHORITY
ENGINEERING SERVICES DEPARTMENT

PLANS AND ESTIMATES PREPARED BY:

BLACK & VEATCH Building a world of difference. Black & Veatch Corporation Kansas City, Missouri

Holloway, Upchike and Bellah Consulting Engineers Muskogee - Broken Arrow

DWGATES Engineering Services

PLAN SCALE:	DRAWN	SCD	APPROVED:
	DESIGNED	SCD	
	SURVEY		
PROFILE SCALE:	FIELD MGR.	DX 10/11	
HORIZONTAL: 1" =	SECT. MGR.		
	PROJ. MGR	RGN 10/3/11	
VERTICAL 1" =	RECOMMENDED: HAS 10/26/11		DIRECTOR
FILE:	DRAWING: GI-7		DATE 10/28/2011
ATLAS PAGE NO:			SHEET 25 OF 261 SHEETS

PSB 9-28-11 B&V PROJECT NO. 145120

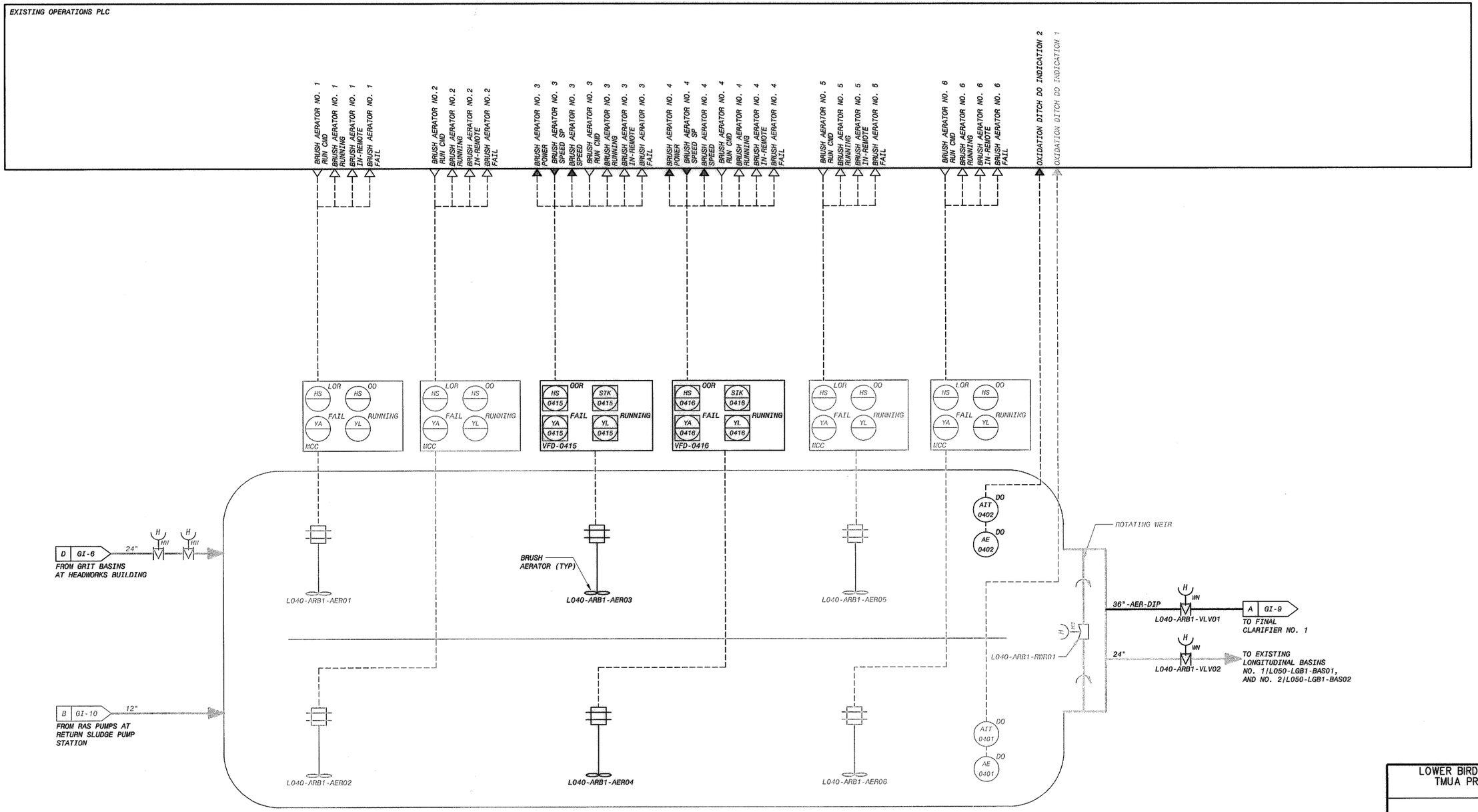

EXISTING OXIDATION DITCH
(AERATION BASIN)
L040-ARB1-BAS01

NOTES:
1. SEE LEGEND ON DRAWINGS GI-1, GI-2 AND GI-3.
2. LOCAL CONTROL DEVICES SUCH AS INDICATING LIGHTS AND SWITCHES, LOCATED ON MCCs OR AT EQUIPMENT, MAY NOT BE INDICATED ON THIS P&ID.

REGISTERED PROFESSIONAL ENGINEER TIMOTHY J. HOLMES 20954 9-23-11 OKLAHOMA

REVISION	BY	DATE

LOWER BIRD CREEK WWTP EXPANSION
TMUA PROJECT NO. ES 2006-01
CONTRACT 1B

GENERAL
P&ID
EXISTING OXIDATION DITCH

CITY OF TULSA, OKLAHOMA
TULSA METROPOLITAN UTILITY AUTHORITY
ENGINEERING SERVICES DEPARTMENT

PLANS AND ESTIMATES PREPARED BY:
BLACK & VEATCH Building a world of difference. Black & Veatch Corporation Kansas City, Missouri
Holloway, Updike and Belton Consulting Engineers Muskogee · Broken Arrow
DWGATES Engineering Services

PLAN SCALE:	DRAWN	SCD	APPROVED:
	DESIGNED	SCD	
	SURVEY		
PROFILE SCALE:	FIELD MGR.	TOS 10/11	
HORIZONTAL: 1" =	SECT. MGR.		
	PROJ. MGR.	R&V 10/3/11	
VERTICAL 1" =	RECOMMENDED: HAS 10/28/11		DIRECTOR
FILE:	DRAWING: GI-8		DATE 10/28/2011
ATLAS PAGE NO:			SHEET 26 OF 261 SHEETS

9-28-11 B&V PROJECT NO. 145120

PLOTTED DATE: 9/21/2011 9:00:52 PM, Batch Plot
SAVED DATE: GGL22631, 6/13/2011 3:33:38 PM
CYGNET ID: 145120-3000-1-B000R9GJ

FD145120
D145120BV

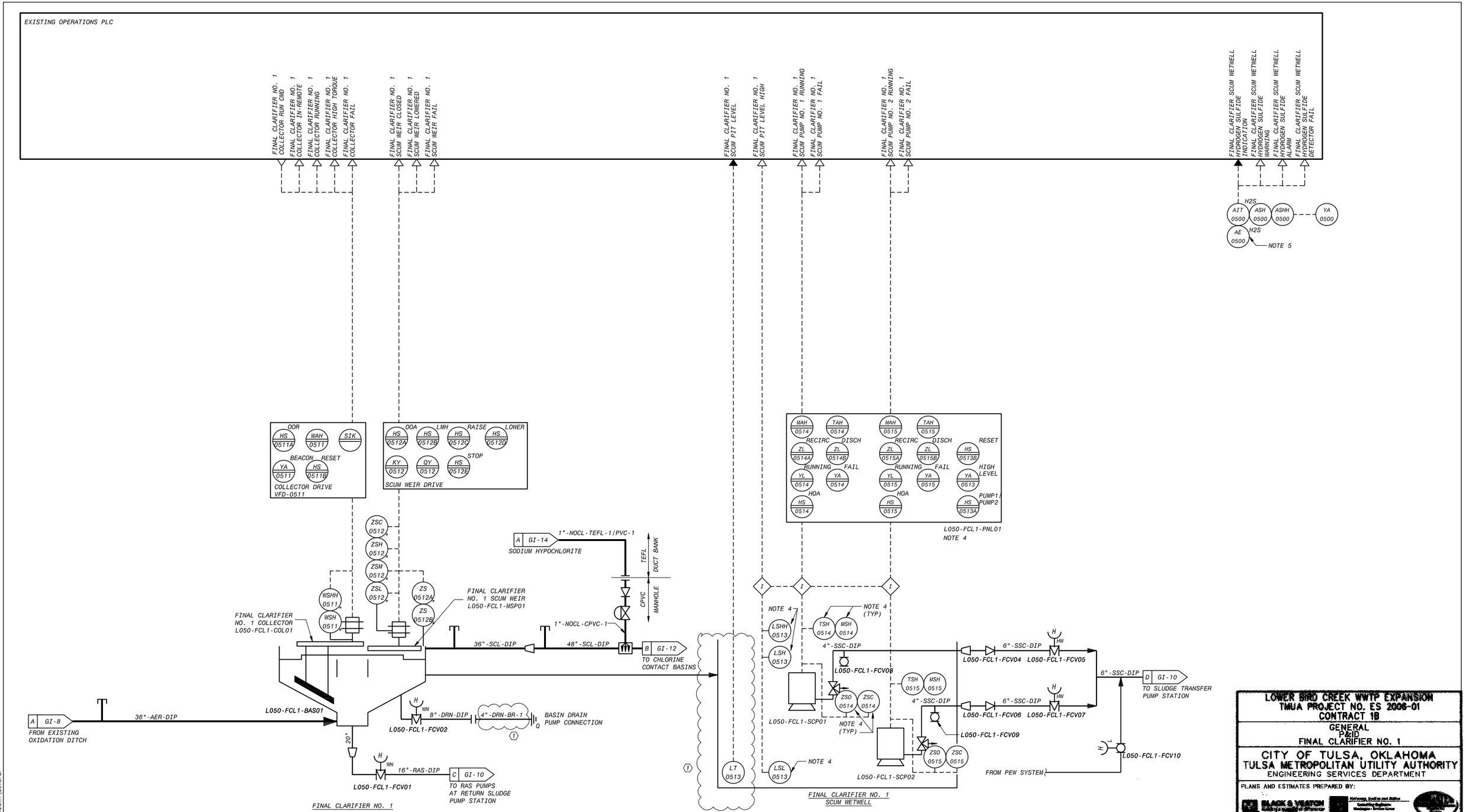

NOTES:

1. SEE LEGEND ON DRAWINGS GI-1, GI-2 AND GI-3. FOR DRAWING CLARITY, VALVE TAG NUMBERS ONLY SHOW THE SEQUENCE NUMBER UNLESS OTHERWISE NOTED.
2. LOCAL CONTROL DEVICES SUCH AS INDICATING LIGHTS AND SWITCHES, LOCATED ON MCCs OR AT EQUIPMENT, MAY NOT BE INDICATED ON THIS P&ID.
3. INSTRUMENTATION PROVIDED UNDER SPECIFICATION SECTION 11435. INSTRUMENTATION MARKED WITH AN ASTERISK (*) ALSO PROVIDED UNDER THIS SECTION.
4. INSTRUMENTATION PROVIDED UNDER SPECIFICATION SECTION 11156.
5. MOUNT SENSOR AT 5 FEET ABOVE GRADE.

REVISION	BY	DATE
ADDENDUM NO. 1	PSB	1-6-12

LOWER BIRD CREEK WWTP EXPANSION
TMUA PROJECT NO. ES 2006-01
CONTRACT 1B

GENERAL
P&ID
FINAL CLARIFIER NO. 1

CITY OF TULSA, OKLAHOMA
TULSA METROPOLITAN UTILITY AUTHORITY
ENGINEERING SERVICES DEPARTMENT

PLANS AND ESTIMATES PREPARED BY:
Black & Veatch Corporation
Black & Veatch Engineering-Architecture, LLC

PLAN SCALE:	DRAWN	SCD	APPROVED:
	DESIGNED	SCD	
	SURVEY		
PROFILE SCALE:	FIELD MGR.		
HORIZONTAL: 1" =	SECT. MGR.		
	PROJ. MGR.		
VERTICAL 1" =	RECOMMENDED:		DIRECTOR
FILE:	DRAWING: GI-9		DATE 10/28/2011
ATLAS PAGE NO:			SHEET 27 OF 261 SHEETS

B&V PROJECT NO. 145120

OGL22631, 6/13/2011 7:23:32 AM
SCH42738, 5/4/2012 12:17:11 PM
PW FLDR: 145120.....General

FD145120

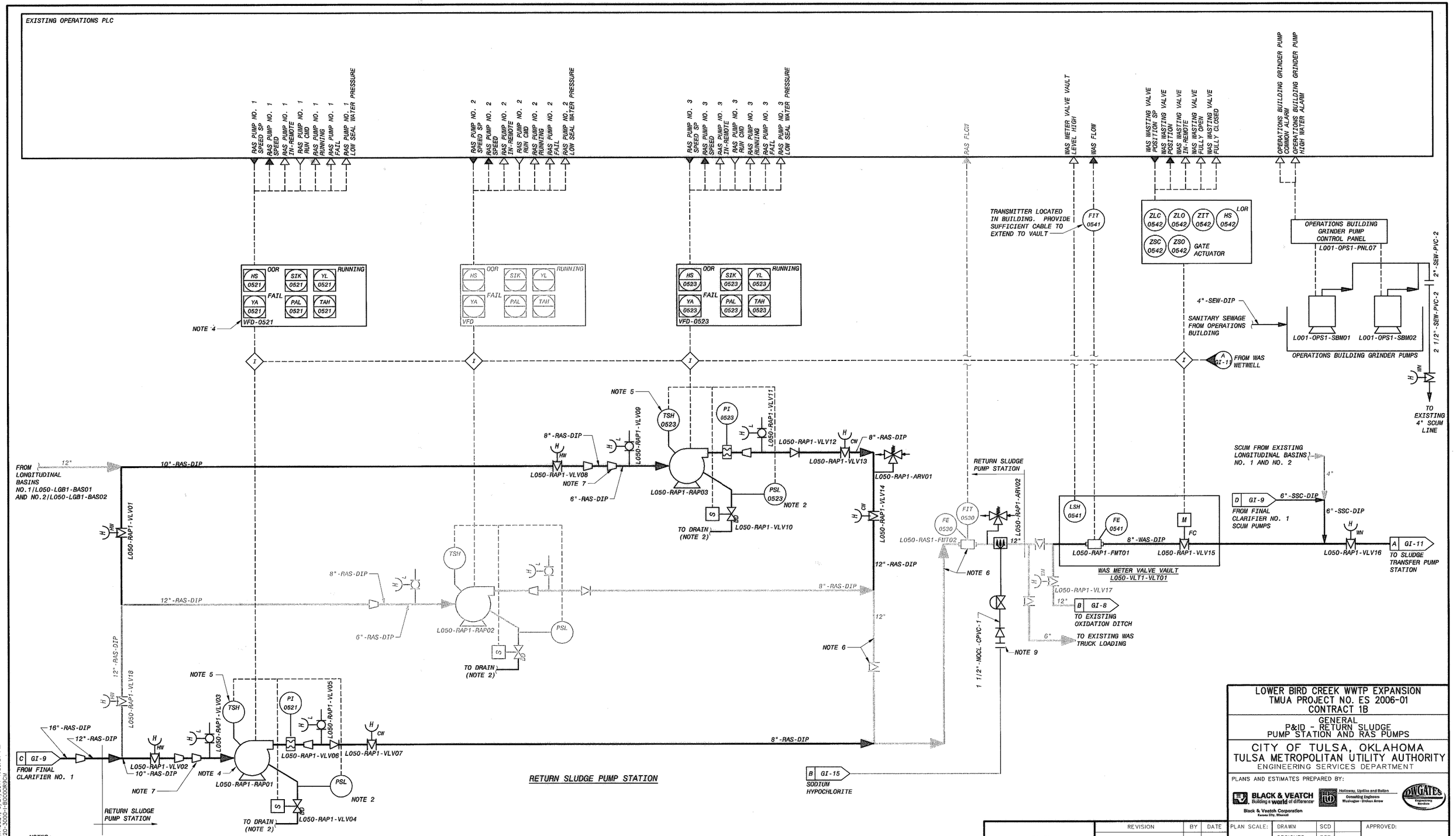

NOTES:

1. SEE LEGEND ON DRAWINGS GI-1, GI-2 AND GI-3.
2. SEE THE SEAL WATER SYSTEM DETAILS IN SPECIFICATION SECTION 15499 FOR FURTHER SEAL WATER VALVE AND PIPING REQUIREMENTS. INSTRUMENT PROVIDED UNDER SECTION 15499.
3. LOCAL CONTROL DEVICES SUCH AS INDICATING LIGHTS AND SWITCHES, LOCATED ON MCCs OR AT EQUIPMENT, MAY NOT BE INDICATED ON THIS P&ID.
4. EXISTING RAS PUMP AND DRIVE TO BE REPLACED WITH NEW PUMP AND DRIVE.
5. INSTRUMENTATION PROVIDED UNDER SPECIFICATION SECTION 11115.
6. EXISTING DISCHARGE HEADER AND ASSOCIATED VALVES, FLOWMETER AND FITTINGS SHALL BE RELOCATED. SEE DRAWINGS BC-3 AND BC-4.
7. 8" X 6" ECCENTRIC REDUCER MAY NOT BE NECESSARY. COORDINATE WITH PUMPUPPLIER ON THE SIZE OF THE INLET.
8. EXISTING EQUIPMENT PIPING AND EQUIPMENT CONFIGURATION MAY DIFFER FROM P&ID.
9. SEE CIVIL/MECHANICAL DRAWINGS FOR LOCATION OF CONNECTION OF NEW AND EXISTING PIPING.

LOWER BIRD CREEK WWTP EXPANSION
TMUA PROJECT NO. ES 2006-01
CONTRACT 1B

GENERAL
P&ID - RETURN SLUDGE PUMP STATION AND RAS PUMPS

CITY OF TULSA, OKLAHOMA
TULSA METROPOLITAN UTILITY AUTHORITY
ENGINEERING SERVICES DEPARTMENT

PLANS AND ESTIMATES PREPARED BY:

BLACK & VEATCH Building a world of difference. Black & Veatch Corporation Kansas City, Missouri

Holloway, Updike and Belton Consulting Engineers Muskogee · Broken Arrow

D.W. GATES Engineering Service

REGISTERED PROFESSIONAL ENGINEER TIMOTHY W. HOLMES 20354 9-23-11 OKLAHOMA

REVISION	BY	DATE

PLAN SCALE:	DRAWN	SCD	APPROVED:
	DESIGNED	SCD	
	SURVEY		
PROFILE SCALE:	FIELD MGR.	TDS 10/11	
HORIZONTAL: 1" =	SECT. MGR.		
	PROJ. MGR.	RBV 10/3/11	
VERTICAL 1" =	RECOMMENDED:	AAS 10/24/11	DIRECTOR
FILE:	DRAWING: GI-10		DATE 10/28/2011
ATLAS PAGE NO:			SHEET 28 OF 261 SHEETS

AAS. 9-28-11

B&V PROJECT NO. 145120

PLOTTED DATE: 9/21/2011 9:01:20 PM, Batch Plot
SAVED DATE: KER43024, 9/21/2011 7:56:51 PM
CYGNET ID: 145120-3000-I-BG000R9CM

FD145120
D145120BV

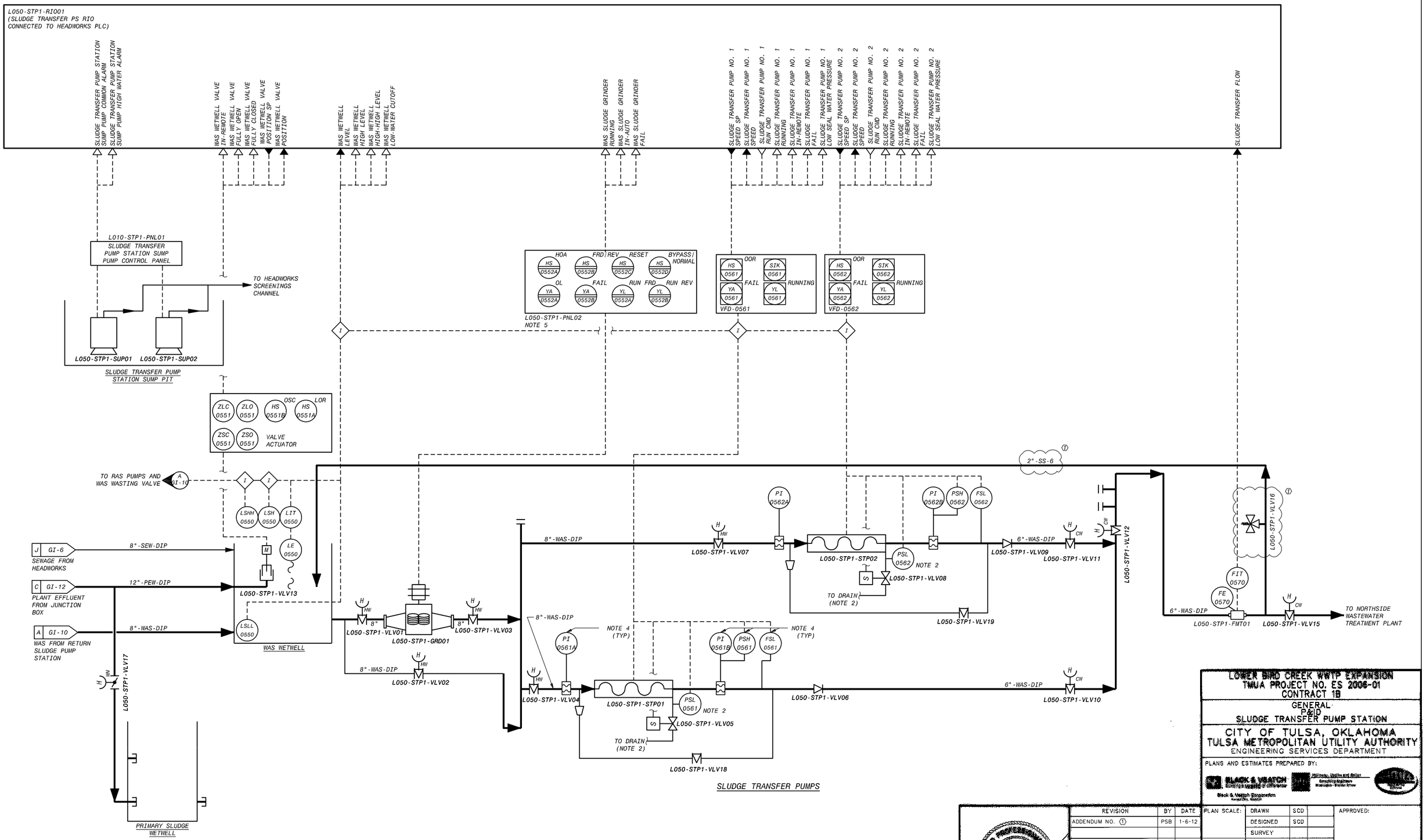

NOTES:
1. SEE LEGEND ON DRAWINGS GI-1, GI-2 AND GI-3.
2. SEE THE SEAL WATER SYSTEM DETAILS IN SPECIFICATION SECTION 15499 FOR FURTHER SEAL WATER VALVE AND PIPING REQUIREMENTS. INSTRUMENT PROVIDED UNDER SECTION 15499.
3. LOCAL CONTROL DEVICES SUCH AS INDICATING LIGHTS AND SWITCHES, LOCATED ON MCCs OR AT EQUIPMENT, MAY NOT BE INDICATED ON THIS P&ID.
4. INSTRUMENTATION PROVIDED UNDER SPECIFICATION SECTION 11160.
5. PROVIDED UNDER SPECIFICATION 11319.

REVISION	BY	DATE
ADDENDUM NO. 1	PSB	1-6-12

LOWER BIRD CREEK WWTP EXPANSION
TMUA PROJECT NO. ES 2006-01
CONTRACT 1B
GENERAL
P&ID
SLUDGE TRANSFER PUMP STATION

CITY OF TULSA, OKLAHOMA
TULSA METROPOLITAN UTILITY AUTHORITY
ENGINEERING SERVICES DEPARTMENT

PLANS AND ESTIMATES PREPARED BY:
BLACK & VEATCH
Black & Veatch Corporation
Kansas City, Missouri
Hillcrest, Upshaw and Associates
Consulting Engineers
Muskogee · Stilwell · Tahlequah

PLAN SCALE:	DRAWN	SCD	APPROVED:
	DESIGNED	SCD	
	SURVEY		
PROFILE SCALE:	FIELD MGR.		
HORIZONTAL: 1" =	SECT. MGR.		
	PROJ. MGR.		
VERTICAL 1" =	RECOMMENDED		DIRECTOR
FILE:	DRAWING: GI-11		DATE 10/28/2011
ATLAS PAGE NO:			SHEET 29 OF 261 SHEETS

B&V PROJECT NO. 145120

OGL22631, 6/8/2011 8:23:43 AM
SCH42738, 5/4/2012 10:48:35 AM
PW FLDR: 145120....\General

FD145120

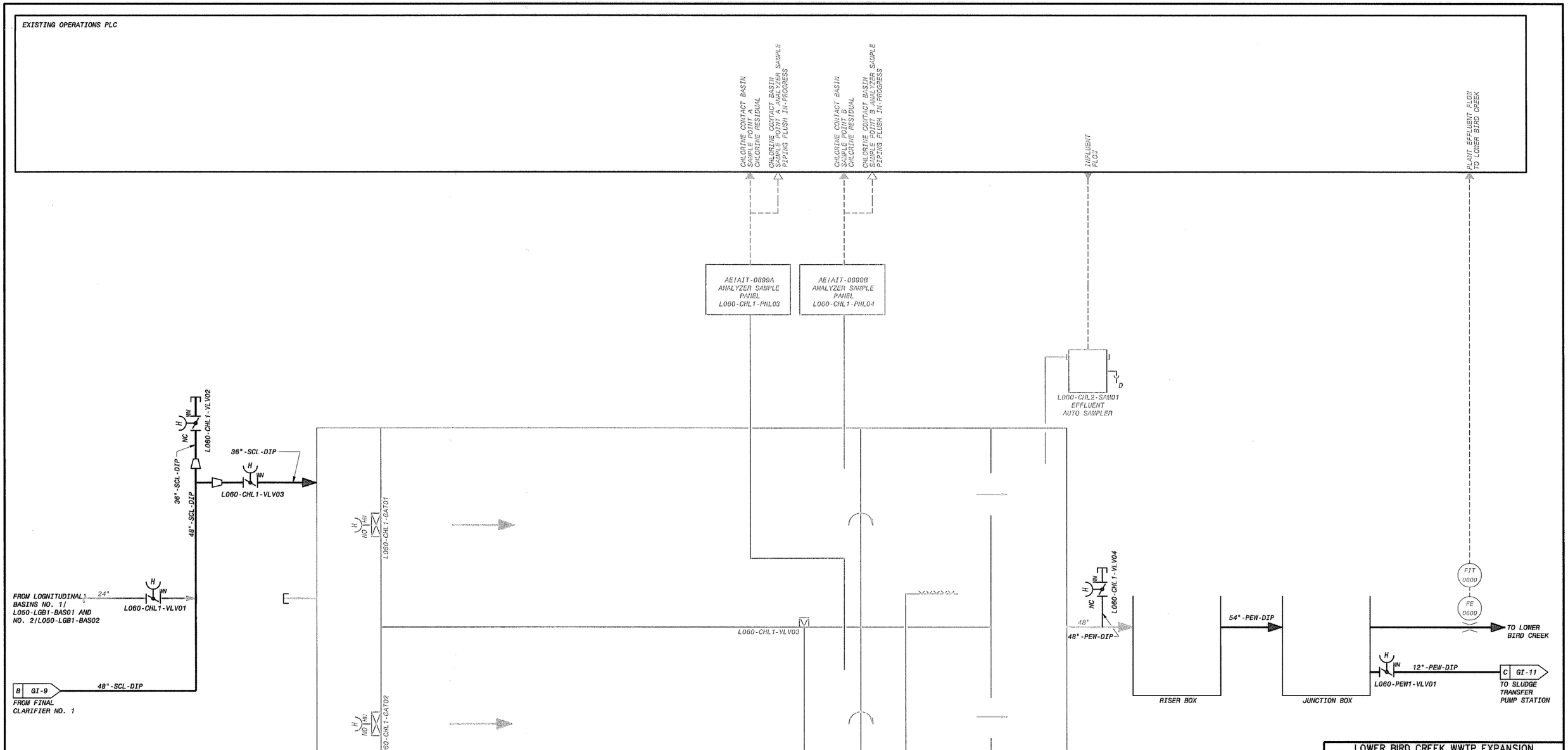

NOTES:
1. SEE LEGEND ON DRAWINGS GI-1, GI-2 AND GI-3.
2. NOT ALL CONTROL AND INDICATING DEVICES ARE INDICATED.

LOWER BIRD CREEK WWTP EXPANSION
TMUA PROJECT NO. ES 2006-01
CONTRACT 1B

GENERAL
P&ID - CHLORINE CONTACT BASIN AND EFFLUENT CONVEYANCE

CITY OF TULSA, OKLAHOMA
TULSA METROPOLITAN UTILITY AUTHORITY
ENGINEERING SERVICES DEPARTMENT

PLANS AND ESTIMATES PREPARED BY:

BLACK & VEATCH Building a world of difference
Black & Veatch Corporation Kansas City, Missouri
Holloway, Updike and Bellen Consulting Engineers Muskogee · Broken Arrow
DWGATES Engineering Services

REGISTERED PROFESSIONAL ENGINEER TIMOTHY S. HOLMES 20954 9-23-11 OKLAHOMA

REVISION	BY	DATE

PLAN SCALE:	DRAWN	SCD	APPROVED:
	DESIGNED	SCD	
	SURVEY		
PROFILE SCALE:	FIELD MGR.	DA	10/5/11
HORIZONTAL: 1" =	SECT. MGR.		
	PROJ. MGR.	BBV	10/5/11
VERTICAL 1" =	RECOMMENDED: HAS 10/26/11		DIRECTOR
FILE:	DRAWING: GI-12		DATE 10/28/2011
ATLAS PAGE NO:			SHEET 30 OF 261 SHEETS

TMS 9-23-11 B&V PROJECT NO.145120

PLOTTED DATE: 9/21/2011 9:02:05 PM, Batch Plot
SAVED DATE: 9/21/2011 8:15:38 PM
CYGNET ID: 145120-3000-H60000R9CP

FD145120
D145120BV

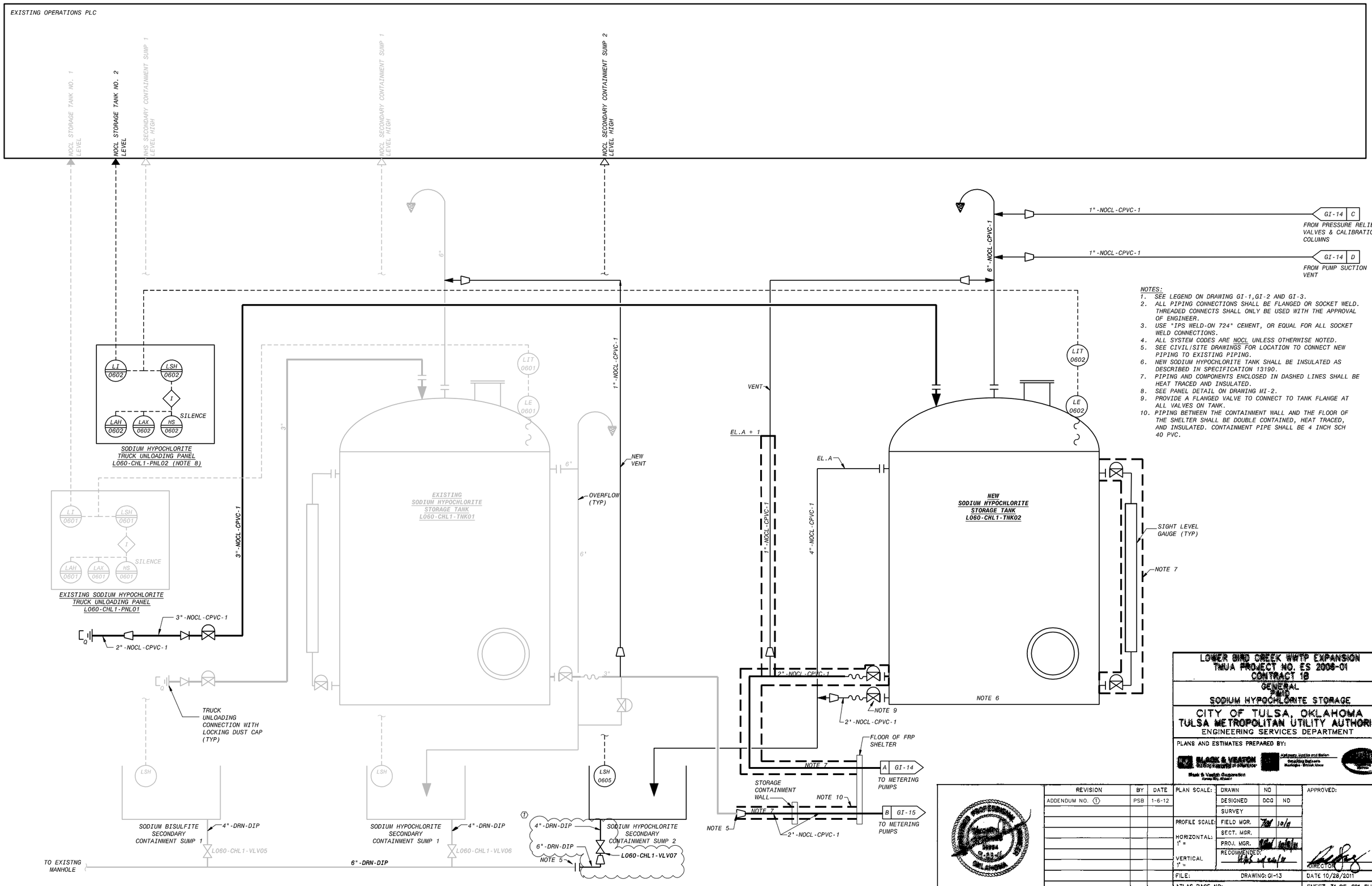

NOTES:

1. SEE LEGEND ON DRAWING GI-1,GI-2 AND GI-3.
2. ALL PIPING CONNECTIONS SHALL BE FLANGED OR SOCKET WELD. THREADED CONNECTS SHALL ONLY BE USED WITH THE APPROVAL OF ENGINEER.
3. USE "IPS WELD-ON 724" CEMENT, OR EQUAL FOR ALL SOCKET WELD CONNECTIONS.
4. ALL SYSTEM CODES ARE NOCL UNLESS OTHERWISE NOTED.
5. SEE CIVIL/SITE DRAWINGS FOR LOCATION TO CONNECT NEW PIPING TO EXISTING PIPING.
6. NEW SODIUM HYPOCHLORITE TANK SHALL BE INSULATED AS DESCRIBED IN SPECIFICATION 13190.
7. PIPING AND COMPONENTS ENCLOSED IN DASHED LINES SHALL BE HEAT TRACED AND INSULATED.
8. SEE PANEL DETAIL ON DRAWING MI-2.
9. PROVIDE A FLANGED VALVE TO CONNECT TO TANK FLANGE AT ALL VALVES ON TANK.
10. PIPING BETWEEN THE CONTAINMENT WALL AND THE FLOOR OF THE SHELTER SHALL BE DOUBLE CONTAINED, HEAT TRACED, AND INSULATED. CONTAINMENT PIPE SHALL BE 4 INCH SCH 40 PVC.

LOWER BIRD CREEK WWTP EXPANSION
TMUA PROJECT NO. ES 2006-01
CONTRACT 18
GENERAL
P&ID
SODIUM HYPOCHLORITE STORAGE

CITY OF TULSA, OKLAHOMA
TULSA METROPOLITAN UTILITY AUTHORITY
ENGINEERING SERVICES DEPARTMENT

PLANS AND ESTIMATES PREPARED BY:

Black & Veatch Corporation

REVISION	BY	DATE
ADDENDUM NO. 1	PSB	1-6-12

PLAN SCALE:	DRAWN	NO	
	DESIGNED	DCG	ND
	SURVEY		
PROFILE SCALE:	FIELD MGR.		10/18
HORIZONTAL: 1" =	SECT. MGR.		
	PROJ. MGR.		
VERTICAL 1" =	RECOMMENDED:		

APPROVED:

DIRECTOR

FILE: DRAWING: GI-13

DATE 10/28/2011

ATLAS PAGE NO:

SHEET 31 OF 281 SHEETS

9-28-11

B&V PROJECT NO. 145120

GL46108, 9/23/2011 5:00:11 PM
SCH42738, 5/4/2012 10:55:42 AM
PW FLDR: 145120...\General

FD145120

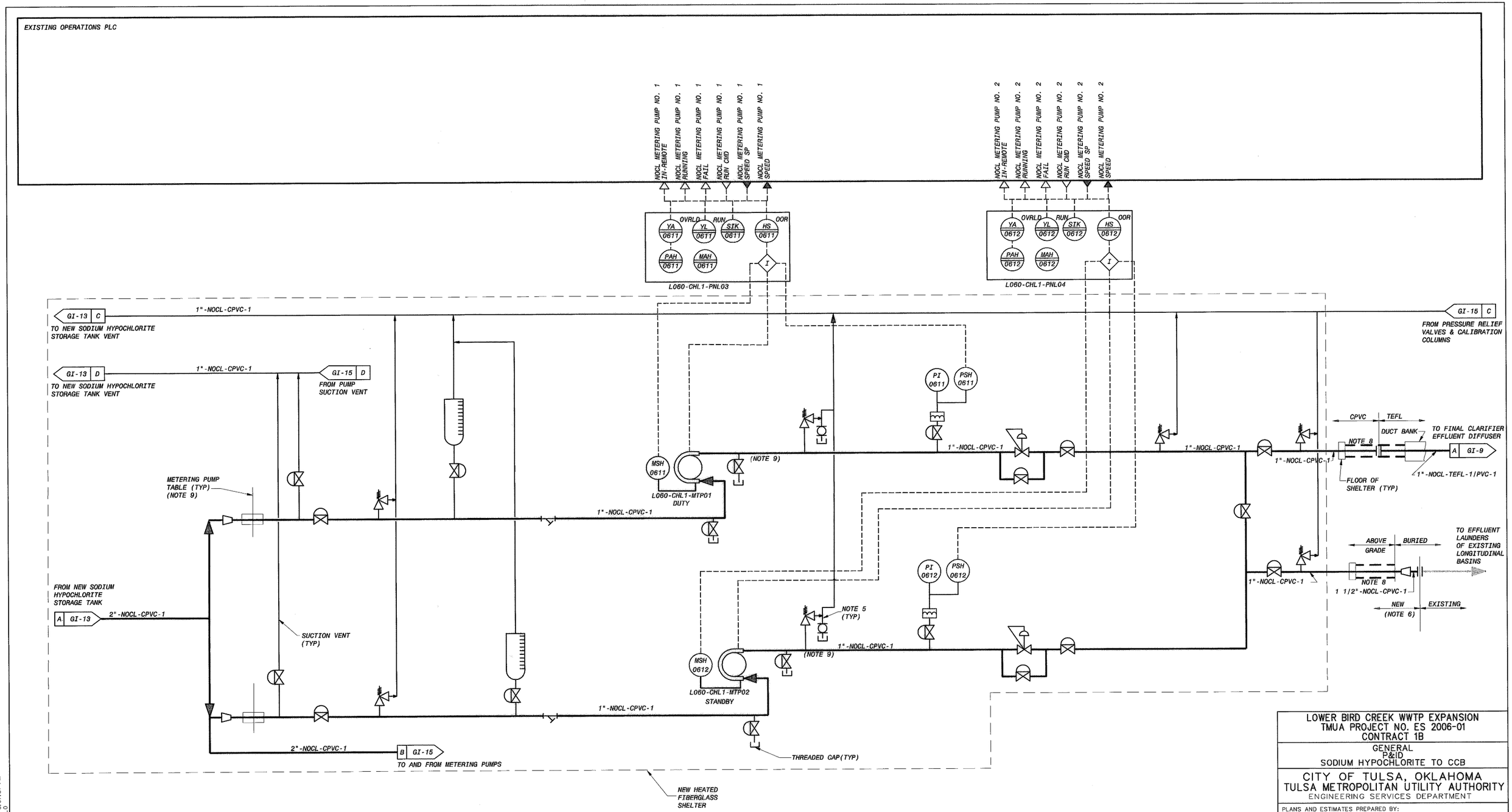

METERING PUMPS

NOTES:
1. SEE LEGEND ON DRAWING GI-1,GI-2 AND GI-3.
2. ALL PIPING CONNECTIONS SHALL BE FLANGED OR SOCKET WELD. THREADED CONNECTS SHALL ONLY BE USED WITH THE APPROVAL OF ENGINEER.
3. USE "IPS WELD-ON 724" CEMENT, OR EQUAL FOR ALL SOCKET WELD CONNECTIONS.
4. ALL SYSTEM CODES ARE NOCL UNLESS OTHERWISE NOTED.
5. CLEAR PVC 6 INCHES LONG WITH THREADED CAP.
6. SEE CIVIL/SITE DRAWINGS FOR LOCATION TO CONNECT NEW PIPING TO EXISTING PIPING.
7. PIPING ENCLOSED IN DASHED LINES SHALL BE HEAT RACED AND INSULATED.
8. PIPING BETWEEN THE SHELTER FLOOR AND DUCT BANK/BURIED SHALL BE DOUBLE CONTAINED, HEAT TRACED, AND INSULATED. CONTAINMENT PIPE SHALL BE 4 INCH SCH 40 PVC.
9. SEE DRAWING MC-5 FOR DETAILS OF METERING PUMP TABLE AND CHEMICAL FEED PANEL.

LOWER BIRD CREEK WWTP EXPANSION
TMUA PROJECT NO. ES 2006-01
CONTRACT 1B

GENERAL
P&ID
SODIUM HYPOCHLORITE TO CCB

CITY OF TULSA, OKLAHOMA
TULSA METROPOLITAN UTILITY AUTHORITY
ENGINEERING SERVICES DEPARTMENT

PLANS AND ESTIMATES PREPARED BY:
BLACK & VEATCH Building a world of difference
Black & Veatch Corporation Kansas City, Missouri
Holloway, Updike and Bellen Consulting Engineers Muskogee · Broken Arrow
DWGATES Engineering Services

REGISTERED PROFESSIONAL ENGINEER TIMOTHY W. HOLMES 20954 9-23-11 OKLAHOMA

REVISION	BY	DATE

PLAN SCALE:	DRAWN	ND	APPROVED:
	DESIGNED	DCG ND	
	SURVEY		
PROFILE SCALE:	FIELD MGR.	10/4	
HORIZONTAL: 1" =	SECT. MGR.		
	PROJ. MGR.	10/3/11	
VERTICAL 1" =	RECOMMENDED:	10/20/11	DIRECTOR
FILE:	DRAWING: GI-14		DATE 10/28/2011
ATLAS PAGE NO:			SHEET 32 OF 261 SHEETS

9-28-11 B&V PROJECT NO. 145120

PLOTTED DATE: 9/21/2011 9:02:31 PM, Batch Plot
SAVED DATE: 06/22/2011 9/20/2011 5:07:31 PM
CYGNET ID: 145120-3000-I-B000GW4L0

FD145120
D145120BV

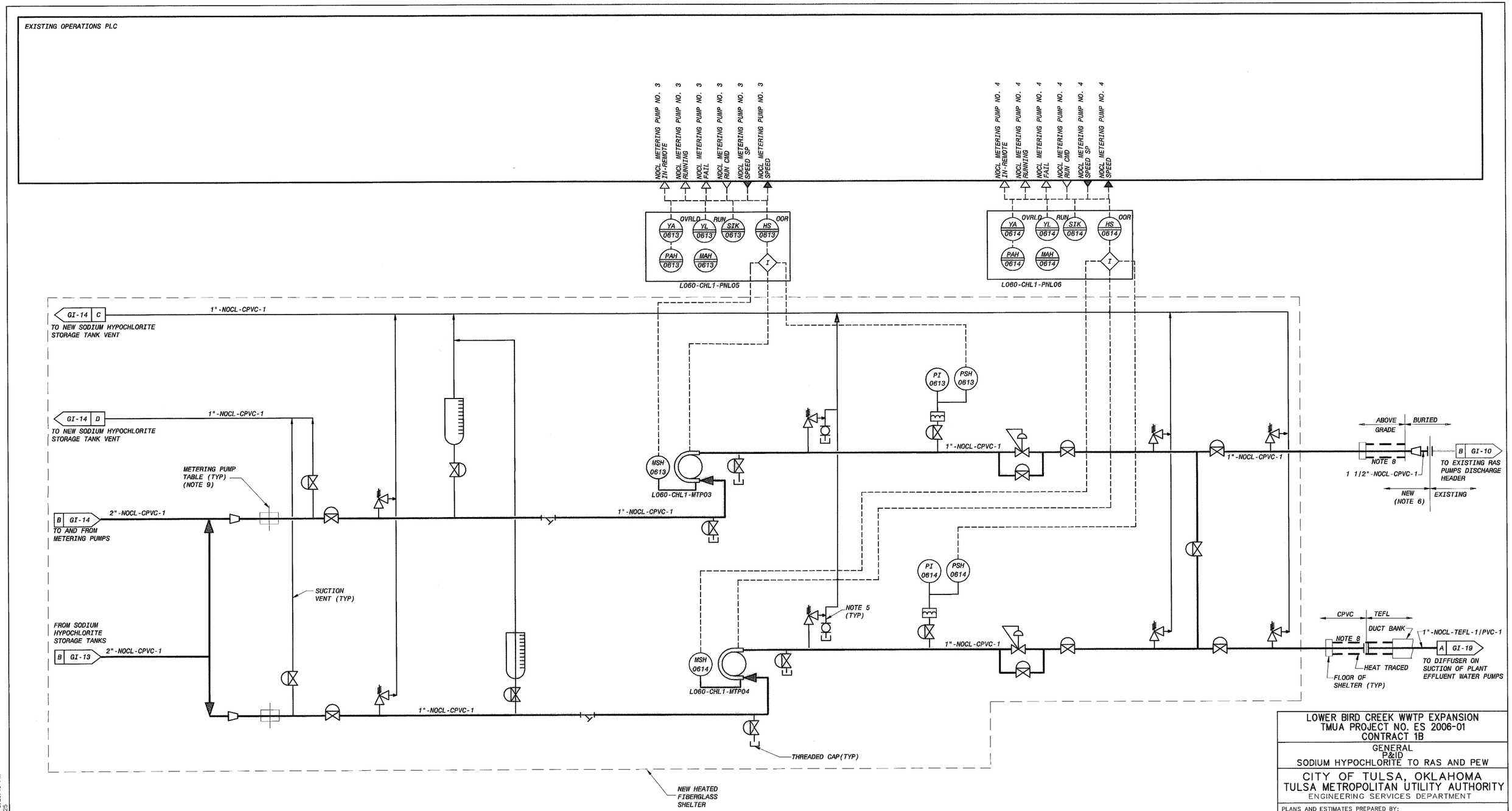

METERING PUMPS

NOTES:
1. SEE LEGEND ON DRAWING GI-1,GI-2 AND GI-3.
2. ALL PIPING CONNECTIONS SHALL BE FLANGED OR SOCKET WELD. THREADED CONNECTS SHALL ONLY BE USED WITH THE APPROVAL OF ENGINEER.
3. USE "IPS WELD-ON 724" CEMENT, OR EQUAL FOR ALL SOCKET WELD CONNECTIONS.
4. ALL SYSTEM CODES ARE NOCL UNLESS OTHERWISE NOTED.
5. CLEAR PVC 6 INCHES LONG WITH THREADED CAP.
6. SEE CIVIL/SITE DRAWINGS FOR LOCATION TO CONNECT NEW PIPING TO EXISTING PIPING.
7. PIPING ENCLOSED IN DASHED LINES SHALL BE HEAT RACED AND INSULATED.
8. PIPING BETWEEN THE SHELTER FLOOR AND DUCT BANK/BURIED SHALL BE DOUBLE CONTAINED, HEAT TRACED, AND INSULATED. CONTAINMENT PIPE SHALL BE 4 INCH SCH 40 PVC.
9. SEE DRAWING MC-5 FOR DETAILS OF METERING PUMP TABLE AND CHEMICAL FEED PANEL.

LOWER BIRD CREEK WWTP EXPANSION
TMUA PROJECT NO. ES 2006-01
CONTRACT 1B

GENERAL
P&ID
SODIUM HYPOCHLORITE TO RAS AND PEW

CITY OF TULSA, OKLAHOMA
TULSA METROPOLITAN UTILITY AUTHORITY
ENGINEERING SERVICES DEPARTMENT

PLANS AND ESTIMATES PREPARED BY:
BLACK & VEATCH Building a world of difference
Black & Veatch Corporation Kansas City, Missouri
Holloway, Updike and Bolton Consulting Engineers Muskogee · Broken Arrow
D.W. GATES Engineering Services

REVISION	BY	DATE

REGISTERED PROFESSIONAL ENGINEER TIMOTHY L. HOLLOWAY 20954 9-23-11 OKLAHOMA

PLAN SCALE:	DRAWN	ND	APPROVED:
	DESIGNED	DCG ND	
	SURVEY		
PROFILE SCALE:	FIELD MGR.	703 10/11	
HORIZONTAL: 1" =	SECT. MGR.		
	PROJ. MGR.	10/5/11	
VERTICAL 1" =	RECOMMENDED: HAS 10/24/11		DIRECTOR
FILE:	DRAWING: GI-15		DATE 10/28/2011
ATLAS PAGE NO:			SHEET 33 OF 261 SHEETS

9-28-11 B&V PROJECT NO. 145120

PLOTTED DATE: 9/21/2011 8:02:46 PM, Batch Plot
SAVED DATE: OGL22631, 9/20/2011 3:26:46 PM
CYGNET ID: 145120-3500-I-B0003W325

FD145120
D145120BV

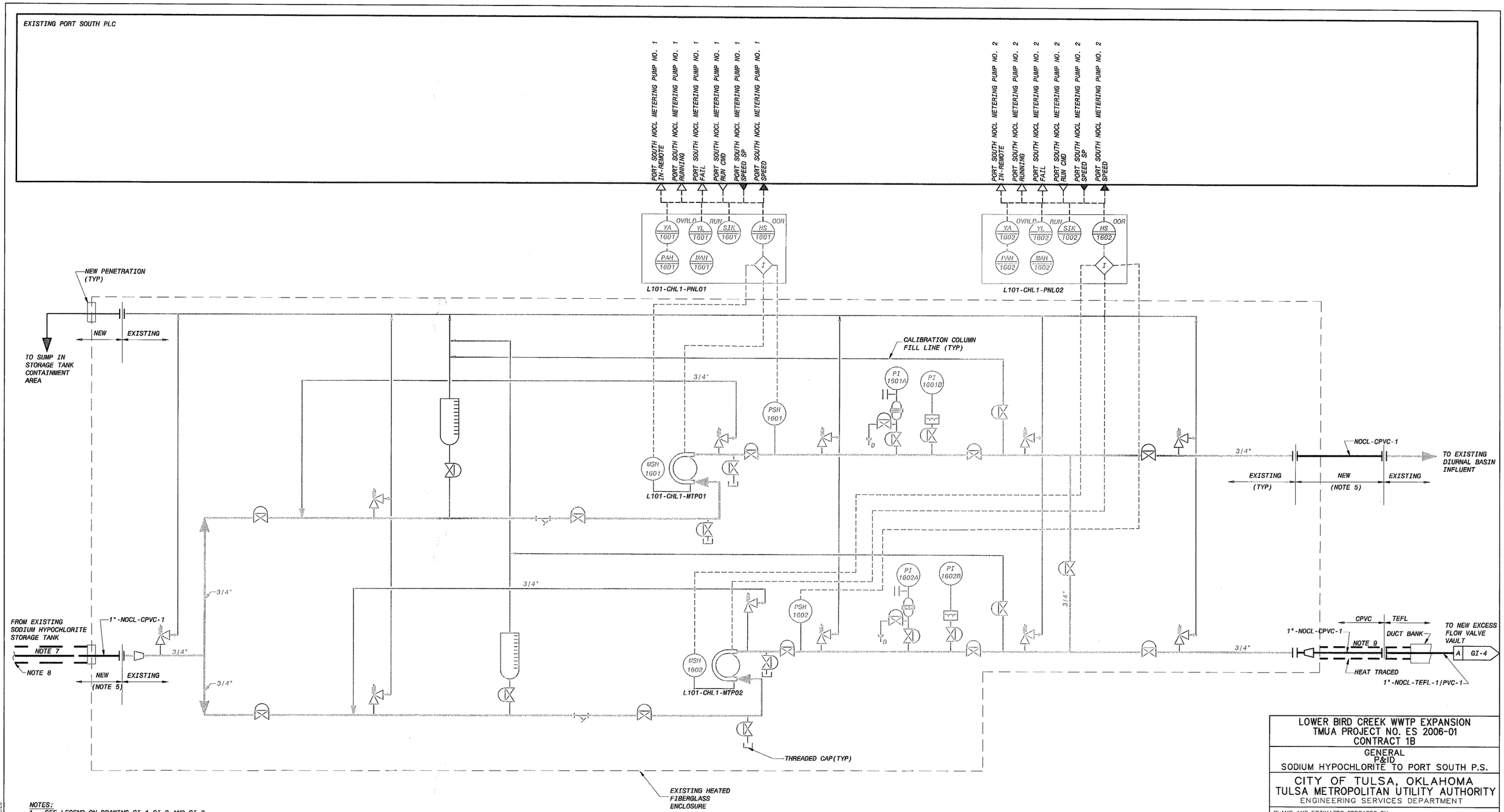

METERING PUMPS

NOTES:
1. SEE LEGEND ON DRAWING GI-1,GI-2 AND GI-3.
2. ALL PIPING CONNECTIONS SHALL BE FLANGED OR SOCKET WELD. THREADED CONNECTS SHALL ONLY BE USED WITH THE APPROVAL OF ENGINEER.
3. USE "IPS WELD-ON 724" CEMENT, OR EQUAL FOR ALL SOCKET WELD CONNECTIONS.
4. ALL SYSTEM CODES ARE NOCL UNLESS OTHERWISE NOTED.
5. SEE CIVIL/SITE DRAWINGS FOR LOCATION TO CONNECT NEW PIPING TO EXISTING PIPING.
6. CONTRACTOR SHALL DEMOLISH EXISTING PUMP I/O CURRENTLY TERMINATED ON LOWER BIRD CREEK EXISTING OPERATIONS PLC.
7. PROVIDE NEW PIPING AND VALVES FROM THE EXISTING STORAGE TANK TO THE METERING PUMP ENCLOSURE. ADD NEW FILL PIPING AND VALVES TO THE EXISTING STORAGE TANK. NEW PIPING AND VALVES TO BE SCHEDULE 80 CPVC.
8. NEW PIPING FROM THE STORAGE TANK TO THE METERING PUMP ENCLOSURE TO BE HEAT TRACED AND INSULATED.
9. PIPING FROM THE PUMP ENCLOSURE TO THE DUCT BANK SHALL BE DOUBLE CONTAINED, HEAT TRACED AND INSULATED.

REGISTERED PROFESSIONAL ENGINEER TIMOTHY J. HOLMES 20954 9-23-11 OKLAHOMA

REVISION	BY	DATE

LOWER BIRD CREEK WWTP EXPANSION
TMUA PROJECT NO. ES 2006-01
CONTRACT 1B

GENERAL
P&ID
SODIUM HYPOCHLORITE TO PORT SOUTH P.S.

CITY OF TULSA, OKLAHOMA
TULSA METROPOLITAN UTILITY AUTHORITY
ENGINEERING SERVICES DEPARTMENT

PLANS AND ESTIMATES PREPARED BY:
BLACK & VEATCH Building a world of difference. Black & Veatch Corporation Kansas City, Missouri
Holloway, Updike and Bellon Consulting Engineers Muskogee · Broken Arrow
DWGATES Engineering Services

PLAN SCALE:	DRAWN	ND	APPROVED:
	DESIGNED	DCG ND	
	SURVEY		
PROFILE SCALE:	FIELD MGR.	TDS 10/11	
HORIZONTAL: 1" =	SECT. MGR.		
	PROJ. MGR.	RBV 10/5/11	
VERTICAL 1" =	RECOMMENDED:	HAS 10/24/11	DIRECTOR
FILE:	DRAWING: GI-16		DATE 10/28/2011
ATLAS PAGE NO:			SHEET 34 OF 261 SHEETS

HAS 9-28-11

B&V PROJECT NO. 145120

PLOTTED DATE: 9/21/2011 9:03:00 PM, Batch Plot
SAVED DATE: DAN57861, 6/14/2011 8:41:18 AM
CYGNET ID: 145120-3000-I-B0000W326

FD145120
D145120BV

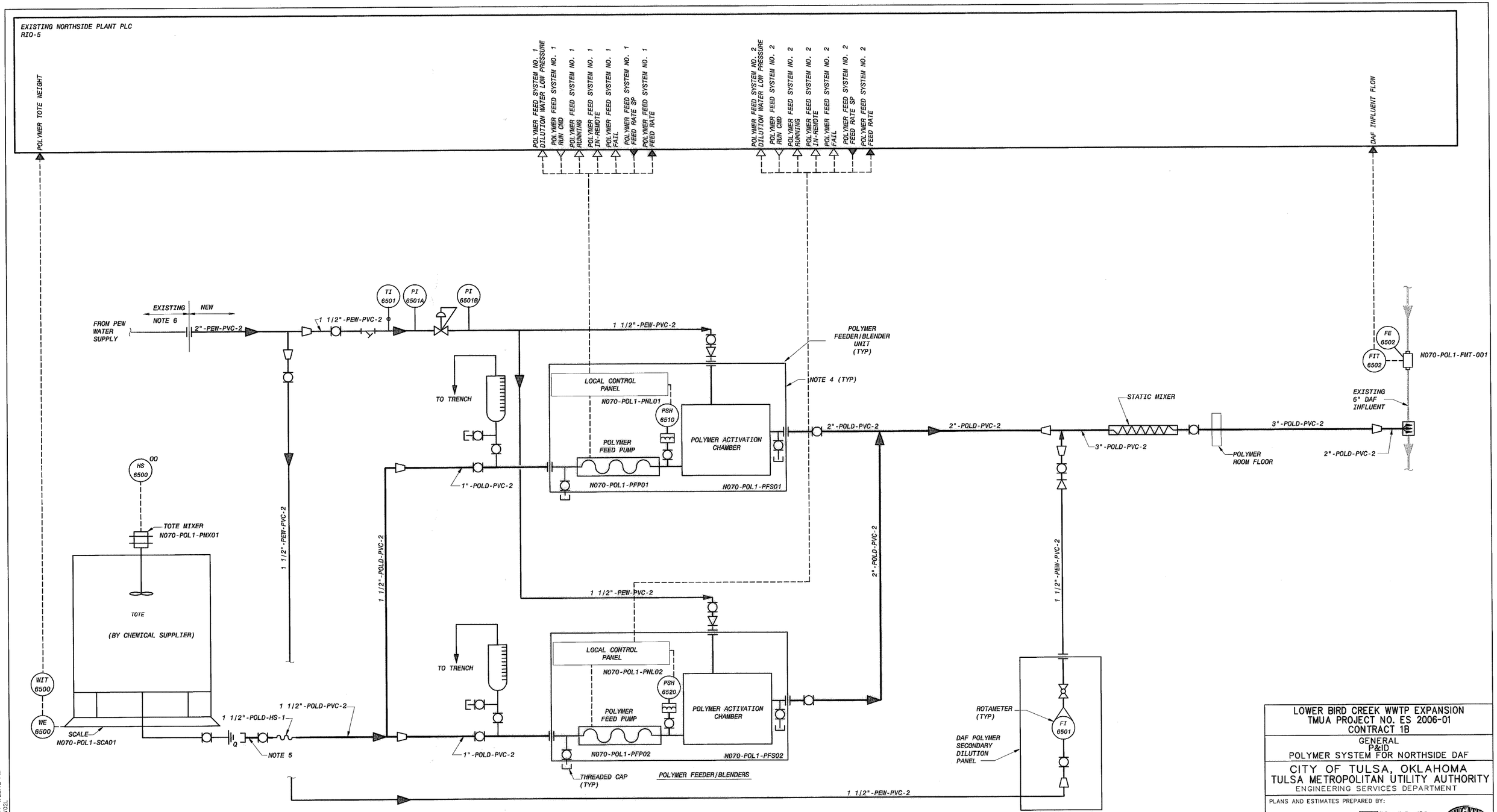

NOTES:
1. SEE LEGEND ON GI-1, GI-2, AND GI-3.
2. SYSTEM CODE IS POLD UNLESS OTHERWISE NOTED.
3. LOCAL CONTROL DEVICES, SUCH AS LIGHTS AND SWITCHES, LOCATED ON MCCs OR AT EQUIPMENT, MAY NOT BE SHOWN ON THIS P&ID.
4. ALL DEVICES ARE NOT SHOWN. REFER TO SPECIFICATION 11728 FOR ADDITIONAL REQUIREMENTS.
5. HOSE, VALVE AND QUICK-CONNECT ASSEMBLY SHALL BE FURNISHED BY CONTRACTOR WITH LENGTH BASED ON LAYOUT DRAWINGS.
6. SEE CIVIL/SITE DRAWINGS FOR LOCATION TO CONNECT NEW PIPING TO EXISTING PIPING.

PLOTTED DATE: 9/21/2011 9:03:13 PM, Batch Plot
SAVED DATE: 9/20/2011 4:28:12 PM
CYONET ID: 145120-3600-P-GI020W02

FD145120
D145120BV

REVISION	BY	DATE

REGISTERED PROFESSIONAL ENGINEER TIMOTHY A. HOLMES 20954 9-23-11 OKLAHOMA

LOWER BIRD CREEK WWTP EXPANSION
TMUA PROJECT NO. ES 2006-01
CONTRACT 1B

GENERAL
P&ID
POLYMER SYSTEM FOR NORTHSIDE DAF

CITY OF TULSA, OKLAHOMA
TULSA METROPOLITAN UTILITY AUTHORITY
ENGINEERING SERVICES DEPARTMENT

PLANS AND ESTIMATES PREPARED BY:
BLACK & VEATCH Building a world of difference. Black & Veatch Corporation Kansas City, Missouri
Holloway, Updike and Bellen Consulting Engineers Muskogee · Broken Arrow
OWGATES Engineering Services

PLAN SCALE: NO SCALE	DRAWN	ND	APPROVED:
	DESIGNED	DCG ND	
	SURVEY		
PROFILE SCALE:	FIELD MGR.	TDS 10/11	
HORIZONTAL: 1" =	SECT. MGR.		
	PROJ. MGR.	RBW 10/13/11	
VERTICAL 1" =	RECOMMENDED: HAS 10/28/11		DIRECTOR
FILE: GI-20	DRAWING: GI-17		DATE 10/28/2011
ATLAS PAGE NO:			SHEET 35 OF 261 SHEETS

9-28-11 B&V PROJECT NO. 145120

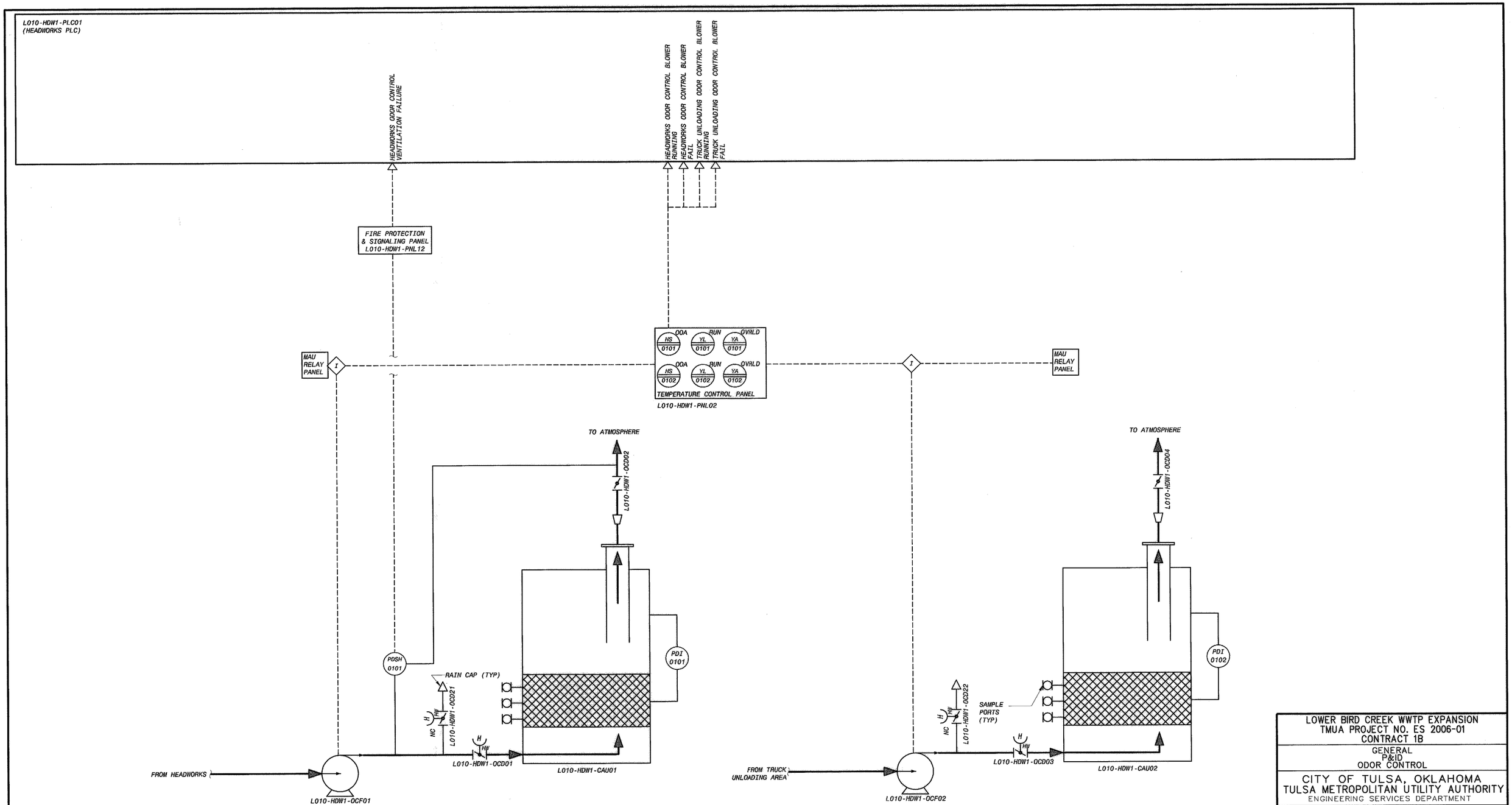

ACTIVATED CARBON ODOR CONTROL UNITS

NOTES:
1. SEE LEGEND ON DRAWINGS GI-1, GI-2 AND GI-3.
2. LOCAL CONTROL DEVICES SUCH AS INDICATING LIGHTS AND SWITCHES, LOCATED ON MCCs OR AT EQUIPMENT, MAY NOT BE INDICATED ON THIS P&ID.
3. ALL INSTRUMENTATION ON THIS P&ID IS PROVIDED BY THE ODOR CONTROL SUPPLIER. REFER TO THE ODOR CONTROL SPECIFICATIONS.

REGISTERED PROFESSIONAL ENGINEER TIMOTHY A. HOLMES 20954 9-23-11 OKLAHOMA

REVISION	BY	DATE

LOWER BIRD CREEK WWTP EXPANSION
TMUA PROJECT NO. ES 2006-01
CONTRACT 1B

GENERAL
P&ID
ODOR CONTROL

CITY OF TULSA, OKLAHOMA
TULSA METROPOLITAN UTILITY AUTHORITY
ENGINEERING SERVICES DEPARTMENT

PLANS AND ESTIMATES PREPARED BY:

BLACK & VEATCH Building a world of difference. Black & Veatch Corporation Kansas City, Missouri
Holloway, Updike and Bellen Consulting Engineers Muskogee - Broken Arrow
DWGATES Engineering Services

PLAN SCALE:	DRAWN	SCD		APPROVED:
	DESIGNED	SCD		
	SURVEY			
PROFILE SCALE:	FIELD MGR.	TOS	10/11	
HORIZONTAL: 1" =	SECT. MGR.			
	PROJ. MGR.	RBW	10/3/11	
VERTICAL 1" =	RECOMMENDED: HAS 10/26/11			DIRECTOR
FILE:	DRAWING: GI-1B			DATE 10/28/2011
ATLAS PAGE NO:				SHEET 36 OF 261 SHEETS

RBW 9-26-11

B&V PROJECT NO. 145120

PLOTTED DATE: 9/21/2011 9:03:26 PM, Batch Plot
SAVED DATE: 09/26/2011 9:12:11 AM
CYGNET ID: 145120-3000-H-B0000R9CQ

FD145120
D145120BV

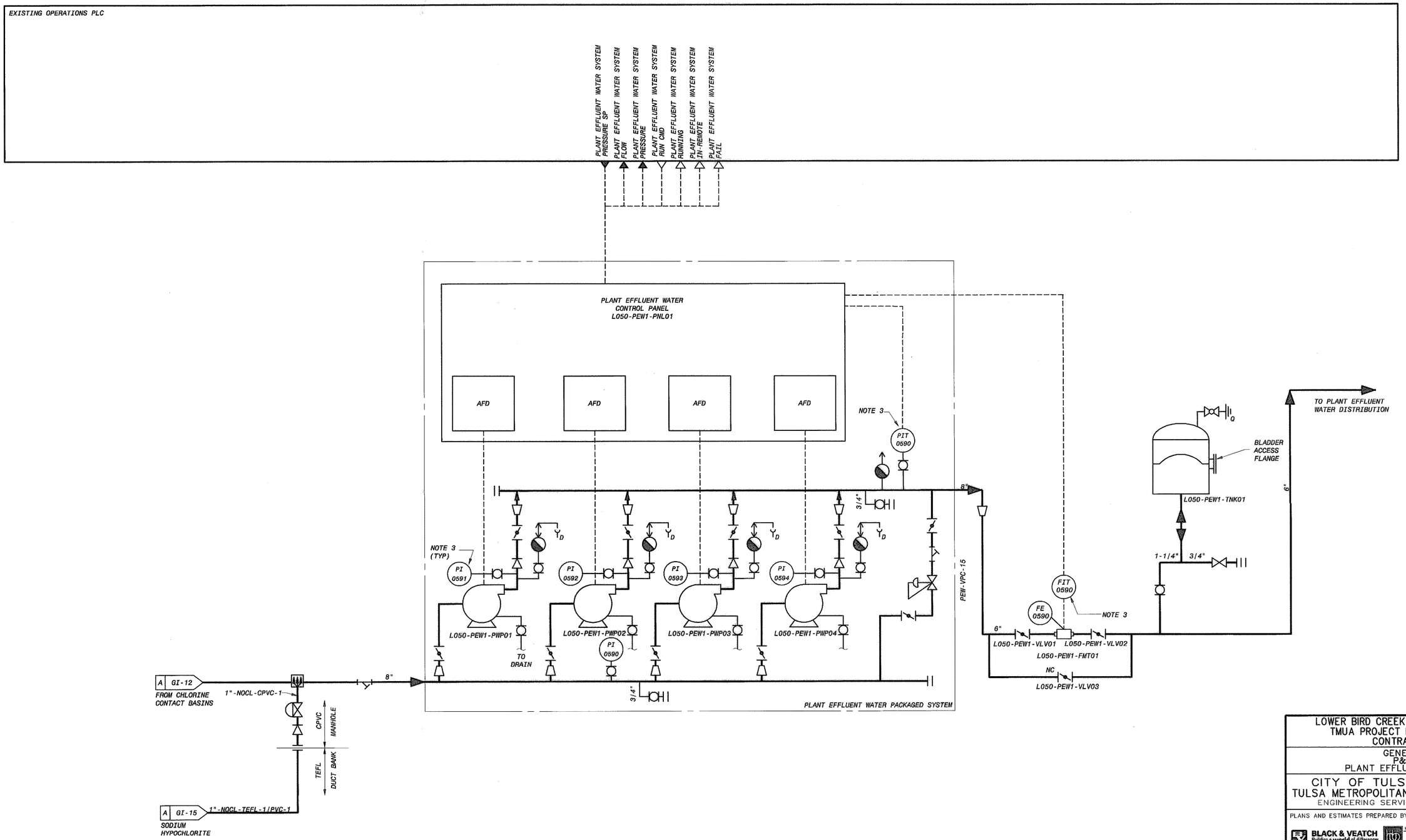

NOTES:

1. SEE LEGEND ON DRAWINGS GI-1, GI-2, AND GI-3.
2. LOCAL CONTROL DEVICES SUCH AS INDICATING LIGHTS AND SWITCHES, LOCATED ON MCCs OR AT EQUIPMENT, MAY NOT BE INDICATED ON THIS P&ID.
3. INSTRUMENTATION PROVIDED BY 15494 SYSTEM SUPPLIER.

REGISTERED PROFESSIONAL ENGINEER TIMOTHY W. HOLMES 20954 9-23-11 OKLAHOMA

REVISION	BY	DATE

LOWER BIRD CREEK WWTP EXPANSION
TMUA PROJECT NO. ES 2006-01
CONTRACT 1B

GENERAL
P&ID
PLANT EFFLUENT WATER

CITY OF TULSA, OKLAHOMA
TULSA METROPOLITAN UTILITY AUTHORITY
ENGINEERING SERVICES DEPARTMENT

PLANS AND ESTIMATES PREPARED BY:
BLACK & VEATCH Building a world of difference. Black & Veatch Corporation Kansas City, Missouri
Holloway, Updike and Ballou Consulting Engineers Muskogee • Broken Arrow
DWGATES Engineering Services

PLAN SCALE:	DRAWN	SCD		APPROVED:
	DESIGNED	SCD		
	SURVEY			
PROFILE SCALE:	FIELD MGR.	TDS	10/11	
HORIZONTAL: 1" =	SECT. MGR.			
	PROJ. MGR.	RBW	10/31/11	
VERTICAL 1" =	RECOMMENDED:	HDS	10/31/11	DIRECTOR
FILE:	DRAWING: GI-19			DATE 10/28/2011
ATLAS PAGE NO:				SHEET 37 OF 261 SHEETS

HDS: 9-28-11

B&V PROJECT NO. 145120

PLOTTED DATE: 9/21/2011 9:03:56 PM, Batch Plot
SAVED DATE: KERA3024, 6/14/2011 9:38:36 AM
CYGNET ID: 145120-3000-I-B0000W4V7

FD145120
D145120GBV

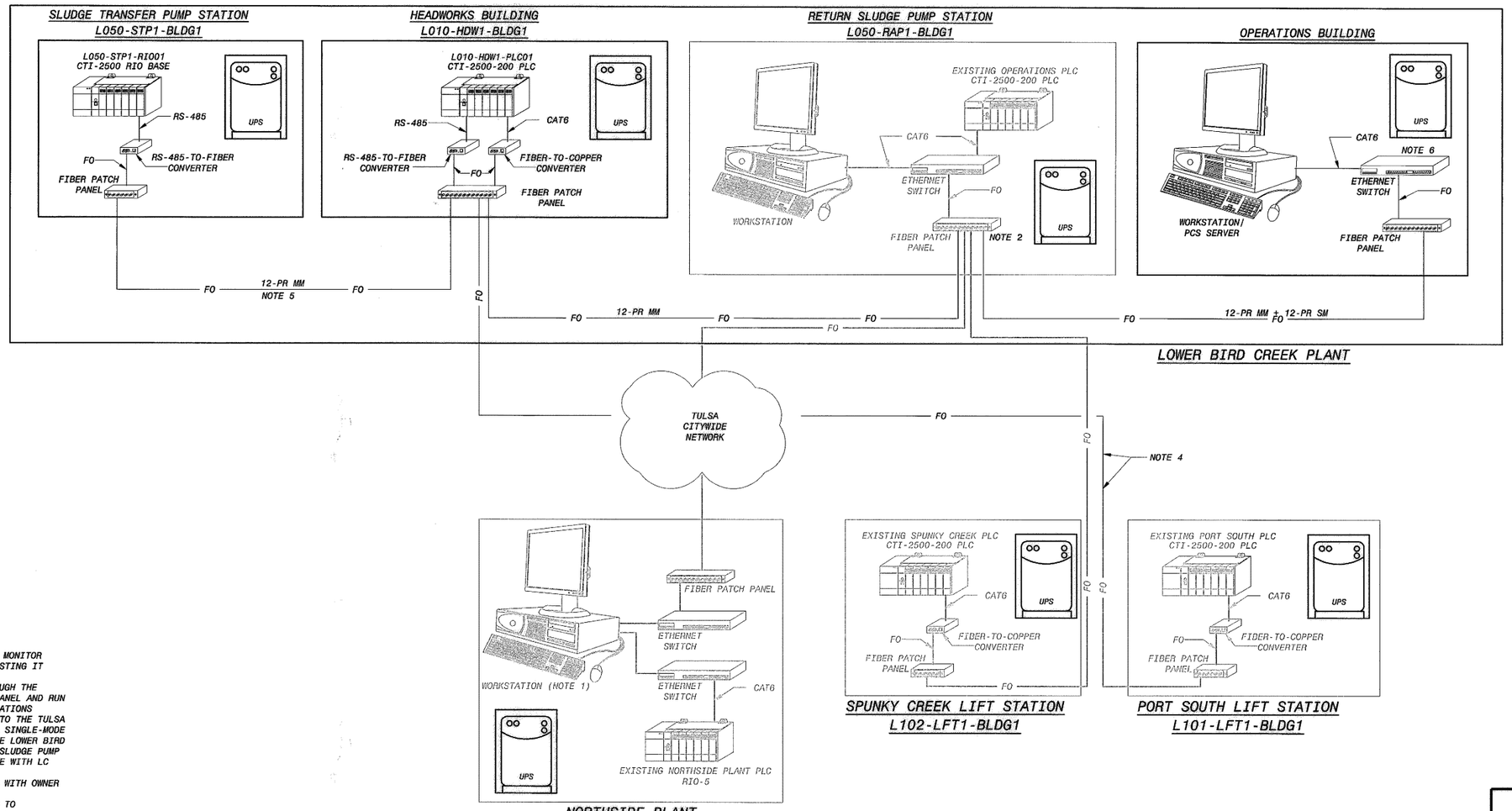

LEGEND:

FO	FIBER OPTIC
MM	MULTI-MODE
PLC	PROGRAMMABLE LOGIC CONTROLLER
PR	PAIR
RIO	REMOTE I/O
SM	SINGLE-MODE
UPS	UNINTERRUPTIBLE POWER SUPPLY

NOTES:

1. NORTHSIDE PLANT RUNS THE SAME PROGRAM TO MONITOR THE LOWER BIRD CREEK PLANT USING THE EXISTING IT ETHERNET NETWORK (MIRROR CONFIGURATION).
2. ALL EXISTING FIBER SHALL BE PATCHED THROUGH THE RETURN SLUDGE PUMP STATION FIBER PATCH PANEL AND RUN TO THE NEW SWITCH AND SERVER IN THE OPERATIONS BUILDING FOR A SINGLE UPLINK CONNECTION TO THE TULSA CITYWIDE NETWORK. EXISTING FIBER IS ALL SINGLE-MODE WITH LC CONECTIONS. NEW FIBER AROUND THE LOWER BIRD CREEK PLANT OPERATIONS BUILDING, RETURN SLUDGE PUMP STATION, AND HEADWORKS WILL BE MULTI-MODE WITH LC CONNECTIONS.
3. CONTRACTOR SHALL COORDINATE IP ADDRESSES WITH OWNER IT DEPARTMENT.
4. EXISTING FIBER OPTIC CABLE TO BE SPLICED TO ACCOMMODATE HEADWORKS BUILDING CONSTRUCTION. CONTRACTOR SHALL LOCATE APPROPRIATE EXISTING HANDHOLE FOR SPLICE LOCATION. EXISTING CABLE IS A 12-PR SINGLE-MODE CABLE. 1-PR SINGLE-MODE SHALL RUN TO HEADWORKS, PATCH THROUGH TO THE RETURN SLUDGE PUMP STATION, AND PATCH THROUGH TO THE OPERATIONS BUILDING SERVER.
5. CONTRACTOR TO INSTALL A SPARE RS-485 CABLE FOR EMERGENCY BACK-UP PURPOSES. CABLE SHALL HAVE TERMINATIONS AND LENGTH SUFFICIENT TO CONNECT TO PLC AND RIO WITHOUT MODIFICATION.
6. NEW FIBER CONNECTION TO THE OPERATIONS BUILDING SHALL INCLUDE 1-PR SINGLE-MODE FOR THE UPLINK TO THE TULSA CITYWIDE NETWORK (PATCHED THROUGH FROM THE RETURN SLUDGE PUMP STATION), 1-PR SINGLE-MODE FOR THE CONNECTION TO THE PORT SOUTH LIFT STATION (PATCHED THROUGH FROM HEADWORKS), 1-PR SINGLE-MODE FOR THE CONNECTION TO THE SPUNKY CREEK LIFT STATION (PATCHED THROUGH FROM THE RETURN SLUDGE PUMP STATION), 1-PR MULTI-MODE FOR THE CONNECTION TO THE RETURN SLUDGE PUMP STATION (CARRYING BOTH PLC DATA AND WORKSTATION DATA), AND 1-PR MULTI-MODE FOR THE CONNECTION TO THE HEADWORKS BUILDING (PATCHED THROUGH THE RETURN SLUDGE PUMP STATION). THE SWITCH SHALL ACCOMMODATE ALL THESE FIBER CONNECTIONS IN ADDITION TO THE SPARE PORT CAPACITY OUTLINED IN 13590.

REGISTERED PROFESSIONAL ENGINEER TIMOTHY HOLMES 20954 9-23-11 OKLAHOMA

REVISION	BY	DATE

LOWER BIRD CREEK WWTP EXPANSION
TMUA PROJECT NO. ES 2006-01
CONTRACT 1B

GENERAL
P&ID
CONTROL SYSTEM BLOCK DIAGRAM

CITY OF TULSA, OKLAHOMA
TULSA METROPOLITAN UTILITY AUTHORITY
ENGINEERING SERVICES DEPARTMENT

PLANS AND ESTIMATES PREPARED BY:
BLACK & VEATCH Building a world of difference. Black & Veatch Corporation Kansas City, Missouri
Holloway, Updike and Bolton Consulting Engineers Muskogee · Broken Arrow
DWGATES Engineering Services

PLAN SCALE:	DRAWN	SCD	APPROVED:
	DESIGNED	SCD	
	SURVEY		
PROFILE SCALE:	FIELD MGR.	TDS 10/11	
HORIZONTAL: 1" =	SECT. MGR.		
	PROJ. MGR.	RBV 10/13/11	
VERTICAL 1" =	RECOMMENDED:	HHB 10/26/11	DIRECTOR
FILE:	DRAWING: GI-20		DATE 10/28/2011
ATLAS PAGE NO:			SHEET 38 OF 261 SHEETS

HHB 9-28-11 B&V PROJECT NO. 145120

PLOTTED DATE: 9/21/2011 9:04:10 PM, Batch Plot
SAVED DATE: KER43024, 9/21/2011 1:30:44 PM
CYGNET ID: 145120-3000-I-B0000R9CR

FD145120
D145120BV

STANDARD ABBREVIATIONS

AC	ASBESTOS CEMENT PIPE	LS	LUMP SUM
ASP	ASPHALT	LT	LEFT
AWWA	AMERICAN WATER WORKS ASSOC.	MAX	MAXIMUM
BM	BENCH MARK – ELEVATION	MIN	MINIMUM
CI	CAST IRON INLET	MJ	MECHANICAL JOINT PIPE FITTING
C–C	CENTER TO CENTER	MSL	MEAN SEA LEVEL
CFS	CUBIC FEET PER SECOND	O.C.	ON CENTER
CIP	CAST IRON PIPE	OD	OUTSIDE DIAMETER
CL	CENTER LINE	ODEQ	OK. DEPT. OF ENV. QUALITY
CMP	CORRUGATED METAL PIPE	ODOT	OK. DEPT. OF TRANSPORTATION
CMPA	CORRUGATED METAL PIPE – ARCH	PD	PUMP DISCHARGE
CONC	CONCRETE	PE	POLYETHYLENE PIPE
CP	SURVEY CONTROL POINT	PL	PROPERTY LINE
CRW	CHEMICALLY RESISTANT WASTE	PP	POWER POLE
CY	CUBIC YARD	PSI	POUNDS PER SQUARE INCH
D/E	DRAINAGE EASEMENT	PVC	POLYVINYL CHLORIDE PIPE
DIP	DUCTILE IRON PIPE	Q100	100 YR FLOW
EA	EACH	RCB	REINFORCED CONCRETE BOX
EL	ELEVATION	RCP	REINFORCED CONCRETE PIPE
E–W	EACH WAY	RJ	RESTRAINED JOINT – PIPE
FA	FOUL AIR	RT	RIGHT
FG	FINISHED GROUND ELEVATION	RW	RIGHT OF WAY LINE
FH	FIRE HYDRANT	SS	SANITARY SEWER
FL	FLOW LINE	STA	STATION
FM	FORCE MAIN (SEWER)	STM	STORM SEWER LINE
GV	GATE VALVE	SY	SQUARE YARD
HW	HEADWALL	TYP	TYPICAL
HYD	FIRE HYDRANT	U/E	UTILITY EASEMENT
ID	INSIDE DIAMETER	WL	WATER LINE
IP	IRON PIN		
LF	LINEAL FEET		

MISCELLANEOUS SYMBOLS AND ABBREVIATIONS

SYMBOL	ABBREV.	DESCRIPTION	SYMBOL	DESCRIPTION
021 S 12	PF	PARSHALL FLUME		FENCE
	LL	LINE LABELS		SECTION LINE
M	FM	FLOW METER		PROPERTY LINE
	GV	GATE VALVE		POWER POLE
	BFV	BUTTERFLY VALVE		TRAFFIC SIGN
	BV	BALL VALVE		LIGHT POLE
	BCV	BALL CHECK VALVE	700	PROPOSED CONTOUR
	CV	CHECK VALVE	700	EXIST. CONTOUR
	PV	PLUG VALVE		TREES
	PRV	PRESSURE RELIEF VALVE		℄ SWALE & FLOW
	PCV	PRESSURE CONTROL VALVE		CREEK OR DITCH SWALE
		VALVE w/ MECHANICAL OPERATOR		DRIVES & MINOR ROADS
	BFP	BACK FLOW PREVENTER		RAILROAD
	ARV	AIR RELIEF VALVE		EXIST. RIGHT OF WAY
	SW	STRUCTURE WALL		REFERENCE POINT
	ES	EXISTING STRUCTURE	B–3	BORING LOCATION
	B	BLOWER		SURVEY BASE LINE
	P	PUMPS		PROPOSED LINE
	MV	MUD VALVE		CONDUIT
	FC	FLEXIBLE COUPLING		IRON PIN
	FC	FLEXIBLE METAL COUPLING		EXISTING TREE LINE
S		SAMPLER		PROPOSED CLEARING LIMIT
	TV	TELESCOPIC VALVE		PIPING (TO BE ABANDONED)
M		MOTOR OPERATOR		
P		PRESSURE GAUGE		
T		TEMPERATURE GAUGE		
	SA	SURFACE AERATOR		
	PG	PRESSURE GAUGE		
	BF	BLIND FLANGE		
		HOSE CONNECTION		
		"Y" TYPE STRAINER		
		EXPANSION JOINT		

PIPE FITTINGS AND PLUMBING ITEMS

DOUBLE LINE	SINGLE LINE	DESCRIPTION	ABBREV.
		WELDED JOINT	
		GROOVED END JOINT	
		BELL & SPIGOT JOINT	
		FLANGED COUPLING ADAPTER WITH THRUST TIES	
		FLEXIBLE COUPLING	FLW. CPLG.
		FLEXIBLE COUPLING WITH THRUST TIES	
		ELASTOMETER BELLOWS EXP. JOINT	EXP. JT.
		ELBOW UP	ELL
		ELBOW DOWN	ELL
		ELBOW 90 DEGREE	ELL
		ELBOW 45 DEGREE	
		LATERAL	
		TEE	TEE
		TEE UP	TEE
		TEE DOWN	TEE
		CROSS	CROSS
		Y–STRAINER	YS
		COUPLING	CPLG
		LATERAL UP	
		LATERAL DOWN	
		CONCENTRIC REDUCER	CONC. RED.
		ECCENTRIC REDUCER	ECC. RED.
		UNION	UN
		CAP	
		FLANGED JOINT	FLG
		FLANGED COUPLING ADAPTER	FCA
		MECHANICAL JOINT	MJ
		MJ w/ RETAINER GLAND	RJ

SURVEY SYMBOLS

SYMBOL	DESCRIPTION
WM	WATER METER
	WATER VALVE
	FIRE HYDRANT
	IRON PIN FOUND
S	SANITARY SEWER MANHOLE
T	TELEPHONE PEDESTAL
F	FIBER OPTIC PEDESTAL
	BENCH MARK
	POWER POLE
	GUY WIRE
	LIGHT POLE
D	STORM SEWER MANHOLE
	TRAFFIC SIGN
C	SANITARY SEWER CLEANOUT

EXISTING UTILITY LINE SYMBOLS

SYMBOL	DESCRIPTION
WL	WATER LINE
SS	SANITARY SEWER LINE
STM	STORM SEWER
UGE	UNDERGROUND ELECTRIC
GAS	GAS LINE
OHE	OVERHEAD ELECTRIC
TUG	UNDERGROUND TELEPHONE
FIB	FIBER OPTIC CABLE
STM	PROPERTY LINE

FLOW STREAM IDENTIFICATION

ALP – AIR, LOW PRESSURE
CGP – CHLORINE GAS, PRESSURE
CGV – CHLORINE GAS, VACUUM
CS – CHLORINE SOLUTION
CRW – CORROSION RESISTANT WASTE
DR – DRAIN (PLANT PROCESS)
DS – DIGESTED SLUDGE
FA – FOUL AIR
GR – GRIT
MLSS – MIXED LIQUOR SUSPENDED SOLIDS
NPW – NONPOTABLE WATER
PEW – PLANT EFFLUENT WATER (NONPOTABLE)
PLE – PLANT EFFLUENT
PO – LIQUID POLYMER
GAS - NATURAL GAS (1)

PSW – PLANT SERVICE WATER (NONPOTABLE)
PW – POTABLE WATER
RS – RAW SEWAGE
RAS/WAS – RETURN/WASTE ACITVATED SLUDGE
RAS – RETURN ACTIVATED SLUDGE
SCUM – SCUM
SDS – SULFUR DIOXIDE SOLUTION
SE – SECONDARY EFFLUENT
SEW – SEWAGE
SHX – SODIUM HYDROXIDE
SS – SANITARY SEWER
STM – STORMWATER
TW – TEPID WATER
WAS – WASTE ACTIVATED SLUDGE

NOTE:
1. LEGEND AND SYMBOLS SHOWN ON THIS SHEET APPLY TO SITEWORK CIVIL DRAWING SHEETS ONLY.

REGISTERED PROFESSIONAL ENGINEER LOYD STEPHEN TOLAR 20679 OKLAHOMA 9/23/11

LOWER BIRD CREEK WWTP EXPANSION
TMUA PROJECT NO. ES 2006–01
CONTRACT 1B
SITE WORK
CIVIL
LEGEND & GENERAL NOTES
CITY OF TULSA, OKLAHOMA
TULSA METROPOLITAN UTILITY AUTHORITY
ENGINEERING SERVICES DEPARTMENT

PLANS AND ESTIMATES PREPARED BY:
BLACK & VEATCH Building a world of difference. Black & Veatch Corporation Kansas City, Missouri
Hollowell, Updike and Bellon Consulting Engineers Muskogee · Broken Arrow
BARGATES Engineers, Inc. Tulsa, Oklahoma

REVISION	BY	DATE
Addendum No. (1)	PSB	1-6-12

PLAN SCALE:	DRAWN	PGM	
	DESIGNED	LST	
	SURVEY		
PROFILE SCALE:	FIELD MGR.	TOS	10/11
HORIZONTAL:	SECT. MGR.		
	PROJ. MGR.	TSV	10/5/11
VERTICAL:	RECOMMENDED:	HPB	10/28/11

APPROVED: DIRECTOR

FILE: DRAWING: SC–1 DATE: 10/28/2011
ATLAS PAGE NO: ---- SHEET 39 OF 261 SHEETS

JBB 9-28-11
B&V PROJECT NO. 145120

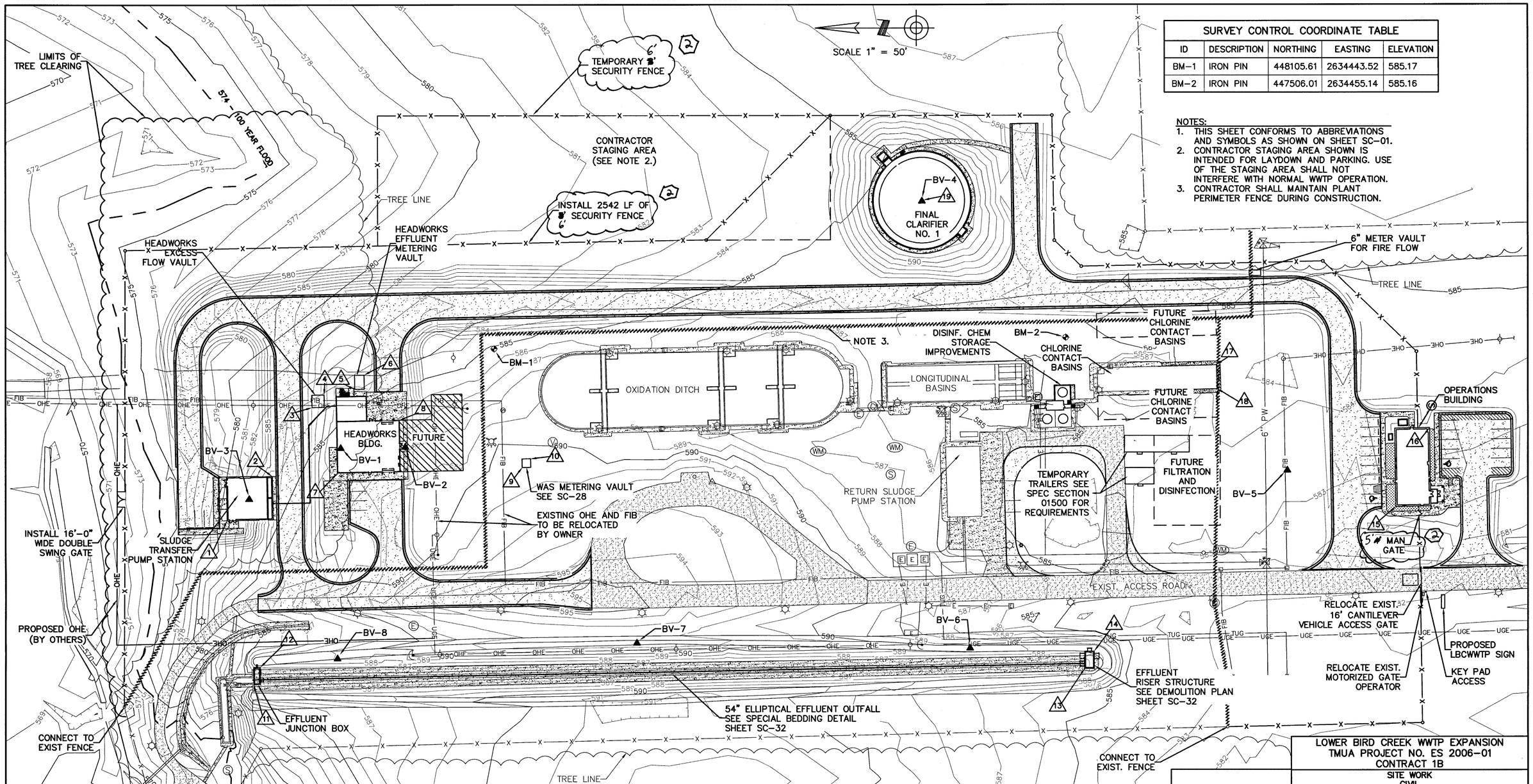

SURVEY CONTROL COORDINATE TABLE				
ID	DESCRIPTION	NORTHING	EASTING	ELEVATION
BM-1	IRON PIN	448105.61	2634443.52	585.17
BM-2	IRON PIN	447506.01	2634455.14	585.16

NOTES:
1. THIS SHEET CONFORMS TO ABBREVIATIONS AND SYMBOLS AS SHOWN ON SHEET SC-01.
2. CONTRACTOR STAGING AREA SHOWN IS INTENDED FOR LAYDOWN AND PARKING. USE OF THE STAGING AREA SHALL NOT INTERFERE WITH NORMAL WWTP OPERATION.
3. CONTRACTOR SHALL MAINTAIN PLANT PERIMETER FENCE DURING CONSTRUCTION.

STRUCTURE COORDINATE TABLE			
ID	DESCRIPTION	NORTHING	EASTING
1	NORTHWEST CORNER SLUDGE TRANSFER PUMP STATION	448385.66	2634263.89
2	SOUTHEAST CORNER SLUDGE TRANSFER PUMP STATION	448338.24	2634310.33
3	NORTHWEST CORNER HEADWORKS EXCESS FLOW VAULT	448296.75	2634382.16
4	SOUTHEAST CORNER HEADWORKS EXCESS FLOW VAULT	448283.98	2634395.39
5	NORTHWEST CORNER HEADWORKS EFFLUENT METERING VAULT	448251.73	2634401.17
6	SOUTHEAST CORNER HEADWORKS EFFLUENT METERING VAULT	448242.00	2634416.10
7	NORTHWEST CORNER HEADWORKS BUILDING	448298.37	2634293.53
8	SOUTHEAST CORNER HEADWORKS BUILDING	448204.99	2634368.87
9	NORTHWEST CORNER WAS METERING VAULT	448076.22	2634319.31
10	SOUTHEAST CORNER WAS METERING VALUT	448067.37	2634328.46

STRUCTURE COORDINATE TABLE			
ID	DESCRIPTION	NORTHING	EASTING
11	NORTHWEST CORNER EFFLUENT JUNCTION BOX	448358.14	2634091.65
12	SOUTHEAST CORNER EFFLUENT JUNCTION BOX	448351.31	2634109.71
13	NORTHWEST CORNER EFFLUENT RISER STRUCTURE	447486.24	2634107.86
14	SOUTHEAST CORNER EFFLUENT RISER STRUCTURE	447476.24	2634125.86
15	NORTHWEST CORNER OPERATIONS BUILDING	447159.57	2634277.60
16	SOUTHEAST CORNER OPERATIONS BUILDING	447124.25	2634360.18
17	SOUTHEAST CORNER CHLORINE CONTACT BASIN	447347.77	2634426.20
18	SOUTHWEST CORNER CHLORINE CONTACT BASIN	447347.04	2634401.02
19	CENTER FINAL CLARIFIER NO. 1	447656.63	2634599.26

BORE COORDINATE TABLE			
ID	DESCRIPTION	NORTHING	EASTING
BV-1	BORE LOCATION	448266.50	2634340.44
BV-2	BORE LOCATION	448198.67	2634341.64
BV-3	BORE LOCATION	448362.66	2634287.10
BV-4	BORE LOCATION	447656.63	2634599.26
BV-5	BORE LOCATION	447273.58	2634316.90
BV-6	BORE LOCATION	447606.35	2634130.25
BV-7	BORE LOCATION	447955.94	2634135.75
BV-8	BORE LOCATION	448269.96	2634119.60

REGISTERED PROFESSIONAL ENGINEER LOYD STEPHEN TOLAR 20679 OKLAHOMA 9/23/11

LOWER BIRD CREEK WWTP EXPANSION
TMUA PROJECT NO. ES 2006-01
CONTRACT 1B

SITE WORK
CIVIL
OVERALL SITE PLAN LBC WWTP

CITY OF TULSA, OKLAHOMA
TULSA METROPOLITAN UTILITY AUTHORITY
ENGINEERING SERVICES DEPARTMENT

PLANS AND ESTIMATES PREPARED BY:
BLACK & VEATCH Building a world of difference. Black & Veatch Corporation Kansas City, Missouri
Holloway, Updike and Belton Consulting Engineers Washington Bristol Ames
BOWGATES

REVISION	BY	DATE
Addendum No. 2	PSB	1-13-12

PLAN SCALE: 1"=50'	DRAWN	PGM	APPROVED:
	DESIGNED	LST	
	SURVEY		
PROFILE SCALE:	FIELD MGR.	TCB 10/11	
HORIZONTAL:	SECT. MGR.		
	PROJ. MGR.	PSB 10/3/11	
VERTICAL:	RECOMMENDED:	HBS 10/24/11	DIRECTOR
FILE:	DRAWING: SC-2		DATE: 10/28/2011
ATLAS PAGE NO: ---			SHEET 40 OF 261 SHEETS

HBS 9-28-11

B&V PROJECT NO. 145120

Z:\Projects\06TULSO3WWTP - Tulsa LBC WWTP\DWG\Contract 1B\LBCWWTP Expansion\Production\Civil Sitework Plan.dwg, 9/22/2011 11:57:15 AM

STRUCTURE/BORE COORDINATE TABLE			
ID	DESCRIPTION	NORTHING	EASTING
20	NORTHWEST CORNER PORT SOUTH EXCESS FLOW METER VAULT	452333.07	2634449.86
21	SOUTHEAST CORNER PORT SOUTH EXCESS FLOW METER VAULT	452314.22	2634467.17
BV-9	BORE LOCATION	452328.05	2634449.22

SURVEY CONTROL COORDINATE TABLE				
ID	DESCRIPTION	NORTHING	EASTING	ELEVATION
BM-3	IRON PIN	452276.62	2634566.54	573.49

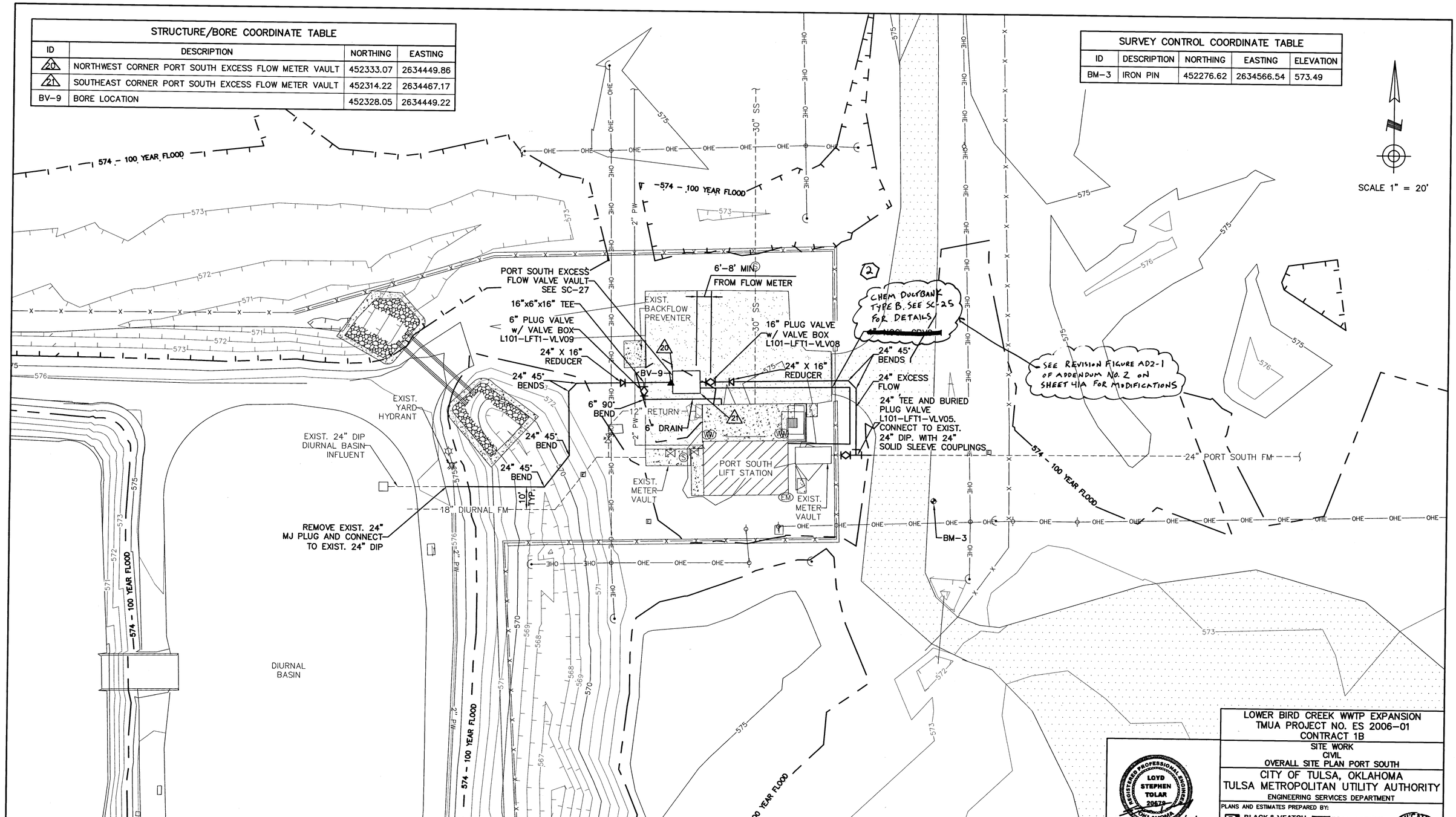

NOTES:

1. THIS SHEET CONFORMS TO ABBREVIATIONS AND SYMBOLS AS SHOWN ON SHEET SC-1.
2. ALL PIPING SHOWN AS ABANDONED SHALL BE CUT AND CAPPED WHERE EXPOSED.
3. LOCATION OF EXISTING BURIED PIPING SHOWN IS APPROXIMATE. CONTRACTOR SHALL VERIFY AND NOTIFY ENGINEER OF DISCREPANCIES.
4. WHERE PROPOSED PIPING CROSSES EXISTING PIPING OR UTILITIES CONTRACTOR SHALL EXCAVATE TO VERIFY DEPTH AND ADJUST GRADES OF PROPOSED PIPING AS REQUIRED.

REVISION	BY	DATE
Addendum No. 2	PSB	1-13-12

REGISTERED PROFESSIONAL ENGINEER LOYD STEPHEN TOLAR 20670 OKLAHOMA 9/23/11

LOWER BIRD CREEK WWTP EXPANSION
TMUA PROJECT NO. ES 2006-01
CONTRACT 1B
SITE WORK
CIVIL
OVERALL SITE PLAN PORT SOUTH
CITY OF TULSA, OKLAHOMA
TULSA METROPOLITAN UTILITY AUTHORITY
ENGINEERING SERVICES DEPARTMENT

PLANS AND ESTIMATES PREPARED BY:
BLACK & VEATCH Building a world of difference. Black & Veatch Corporation Kansas City, Missouri
Holloway, Updike and Belton Consulting Engineers Washington Bruton Jones
OWGATES

PLAN SCALE: 1"=20'	DRAWN	PGM	
	DESIGNED	LSBT	
	SURVEY		
PROFILE SCALE:	FIELD MGR.	TOB	10/11
HORIZONTAL:	SECT. MGR.		
	PROJ. MGR.	TBM	10/5/11
VERTICAL:	RECOMMENDED: HAS 10/26/11		

APPROVED:
DIRECTOR
FILE: DRAWING: SC-3
DATE: 10/28/2011
ATLAS PAGE NO: ----
SHEET 41 OF 261 SHEETS
B&V PROJECT NO. 145120

HAS 9-28-11

Z:\Projects\06TULS03WWTP - Tulsa LBC WWTP\DWG\Contract 1B\LBCWWTP Expansion\Production\Civil Sitework Plan.dwg, 9/22/2011 11:58:07 AM

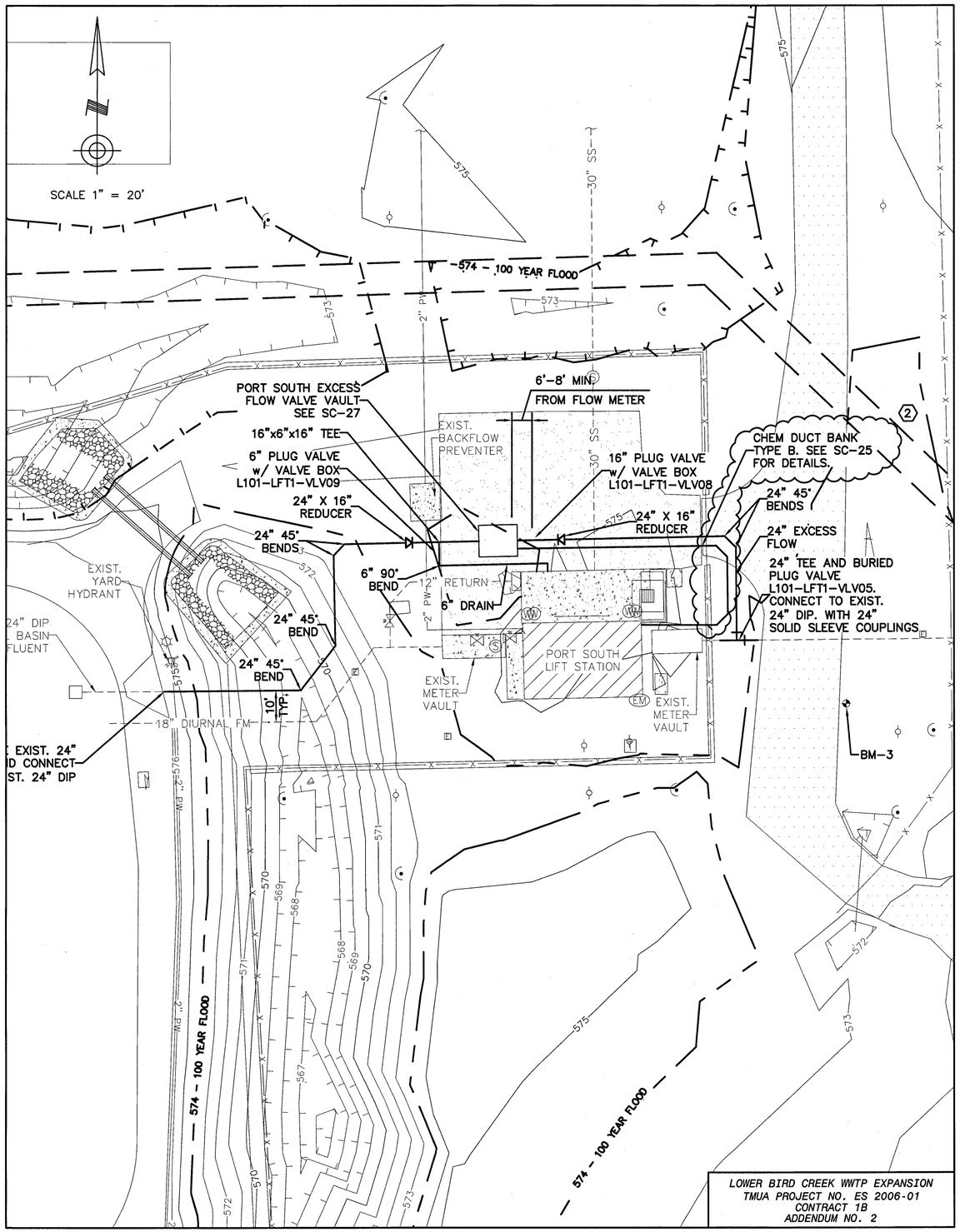

LOWER BIRD CREEK WWTP EXPANSION
TMUA PROJECT NO. ES 2006-01
CONTRACT 1B
ADDENDUM NO. 2

REFERENCE DRAWING SC-3

FIGURE AD2-1

LOWER BIRD CREEK WWTP EXPANSION
TMUA PROJECT NO. ES 2006-01
CONTRACT 1B

SITE WORK
CIVIL
REVISION FIGURE AD2-1

CITY OF TULSA, OKLAHOMA
TULSA METROPOLITAN UTILITY AUTHORITY
ENGINEERING SERVICES DEPARTMENT

REGISTERED PROFESSIONAL ENGINEER LOYD STEPHEN TOLAR 20679 OKLAHOMA 1/13/11

PLANS AND ESTIMATES PREPARED BY:
BLACK & VEATCH Building a world of difference. Black & Veatch Corporation Kansas City, Missouri
Holloway, Updike and Beilan Consulting Engineers Muskogee · Broken Arrow
DWGATES Engineering Services

REVISION	BY	DATE
ADDENDUM NO. 2	PSB	1-13-12

PLAN SCALE: 1"=20'	DRAWN	PGM	
	DESIGNED	LST	
	SURVEY		
PROFILE SCALE:	FIELD MGR.		
HORIZONTAL:	SECT. MGR.		
	PROJ. MGR.		
VERTICAL:	RECOMMENDED:		
FILE:	DRAWING: SC-3A		
ATLAS PAGE NO: ---			

APPROVED:

DIRECTOR

DATE: 10/28/2011

SHEET 41A OF 261 SHEETS

B&V PROJECT NO. 145120

STORMWATER MANAGEMENT PLAN

SITE DESCRIPTION

PROJECT LIMITS: LOWER BIRD CREEK WASTE WATER TREATMENT PLANT

PROJECT DESCRIPTION: EXCAVATION, GRADING, EMBANKMENT, BUILDING EXPANSION AND CONSTRUCTION, ROADWAY CONSTRUCTION, AND STORM SEWER CONSTRUCTION

SUGGESTED SEQUENCE OF EROSION CONTROL ACTIVITIES:

1. CLEAR AND GRUB AREA OF CONSTRUCTION
2. STRIP, STOCKPILE AND STABILIZE TOPSOIL
3. REPLACE SALVAGED TOPSOIL AND DEVICES PRIOR TO INSTALLATION OF PERMANENT SOD AND SEEDING
4. AS SITE CONDITIONS WARRANT, THE CONTRACTOR MAY CHOOSE TO MODIFY THE TYPE OR ARRANGEMENT OF SPECIFIED PRACTICES TO IMPROVE THEIR EFFECTIVENESS AS APPROVED BY THE ENGINEER
5. THE CONTRACTOR WILL MAINTAIN A LOG OF DATES OF MAJOR SOIL DISTURBANCE ACTIVITIES, AND ALSO THE DATES OF INSTALLATION OF EROSION CONTROL MEASURES.

AREA TO BE DISTURBED: 9.9 AC

OFFSITE AREA TO BE DISTURBED: _____
(FOR CONTRACTOR USE)

WEIGHTED RUNOFF COEFFICIENT
Before Construction: .34
After Construction: .66

NAME OF RECEIVING WATERS: LOWER BIRD CREEK

NOTE: THIS SHEET SHOULD BE USED IN CONJUNCTION WITH THE EROSION CONTROL SUMMARIES, PAY ITEMS, & NOTES.

EROSION AND SEDIMENT CONTROLS

SOIL STABILIZATION PRACTICES:

- ____ TEMPORARY SEEDING
- X PERMANENT SODDING, SPRIGGING OR SEEDING
- ____ VEGETATIVE MULCHING
- ____ SOIL RETENTION BLANKET
- X PRESERVATION OF EXISTING VEGETATION

NOTE: TEMPORARY EROSION CONTROL METHODS MUST BE USED ON ALL DISTURBED AREAS WHERE CONSTRUCTION ACTIVITIES HAVE CEASED FOR OVER 21 DAYS. METHODS USED WILL BE AS SHOWN ON PLANS, OR AS DIRECTED BY THE ENGINEER.

STRUCTURAL PRACTICES:

- ____ TEMPORARY BRUSH SEDIMENT BARRIERS
- X TEMPORARY SILT FENCE
- ____ TEMPORARY SILT DIKES
- ____ TEMPORARY BALE BARRIERS
- ____ DIVERSION, INTERCEPTOR OR PERIMETER DIKES
- ____ DIVERSION, INTERCEPTOR OR PERIMETER SWALES
- ____ SANDBAG BERMS
- ____ ROCK FILTER DAMS
- ____ TEMPORARY SLOPE DRAIN
- ____ PAVED DITCH W/ DITCH LINER PROTECTION
- ____ TEMPORARY DIVERSION CHANNELS
- ____ RIP RAP
- ____ TEMPORARY STREAM CROSSINGS
- ____ TEMPORARY SEDIMENT BASINS
- ____ TEMPORARY SEDIMENT TRAPS
- ____ TEMPORARY SEDIMENT FILTERS
- ____ TEMPORARY SEDIMENT REMOVAL
- ____ INLET SEDIMENT FILTER
- ____ STABILIZED CONSTRUCTION EXIT

OFFSITE VEHICLE TRACKING:

- ____ HAUL ROADS DAMPENED FOR DUST CONTROL
- X LOADED HAUL TRUCKS TO BE COVERED WITH TARP
- X EXCESS DIRT ON ROAD REMOVED DAILY

NOTES:

1. THERE ARE NO ENDANGERED OR THREATENED SPECIES OR CRITICAL HABITAT FOUND IN THE PROXIMITY OF THE PROJECT. CONTRACTOR SHALL NOTIFY THE ENGINEER IMMEDIATELY IF SUCH SPECIES LISTED ON THE U.S. FISH AND WILDLIFE'S LIST OF THREATENED OR ENDANGERED SPECIES ARE ENCOUNTERED.

2. THERE ARE NO PROTECTED PROPERTIES SUCH AS FEDERAL, STATE OR LOCAL HISTORIC PRESERVATION SITES IMPACTED BY THIS PROJECT.

THE CONTRACTOR SHALL ALSO BE RESPONSIBLE FOR THE FOLLOWING:

MAINTENANCE AND INSPECTION:
All erosion and sediment controls will be maintained in good working order from the beginning of construction until an acceptable vegetative cover is established. Inspection by the Contractor and any necessary repairs shall be performed once every 7 calendar days and within 24 hours after any storm event greater than 0.5 in (1.25 cm) as recorded by a non-freezing rain gauge to be located on site. Potentially erodible areas, drainageways, material storage, structural devices, construction entrances and exits along with erosion and sediment control locations are examples of sites that need to be inspected.

WASTE MATERIALS:
Proper management and disposal of construction waste material is required by the Contractor. Materials include stockpiles, surplus, debris and all other by-products from the construction process. Practices include disposal, proper materials handling, spill prevention and cleanup measures. Controls and practices shall meet the requirements of all Federal, State and Local agencies.

HAZARDOUS MATERIALS:
Proper management and disposal of hazardous waste materials is required. The Contractor is responsible for following manufacturer's recommendations, State and Federal regulations to ensure correct handling, disposal, spill prevention and cleanup measures. Examples include but are not limited to: paints, acids, cleaning solvents, chemical additives, concrete curing compounds and contaminated soils.

GENERAL NOTES:
A Stormwater Pollution Prevention Plan (SW3P) is required to comply with the Oklahoma Pollution Discharge Elimination System (OPDES) regulations. This plan is initiated during the design phase, confirmed in the pre-work meetings and available on the job site along with copies of the Notice of Intent (NOI) forms that have been filed with the Oklahoma Department of Environmental Quality (ODEQ). The plan must be kept current with up-to-date amendments during the progression of the project. The basic goal of stormwater management is to improve water quality by reducing pollutants in storm water discharges. Runoff from construction sites has a potential for pollution due to exposed soils and the presence of hazardous materials used in the construction process. The prevention of soil erosion, containment of hazardous materials and/or the interception of these pollutants before leaving the construction site are the best practices for controlling stormwater pollution.

The following Subsections of ODOT's Standard Specifications book should be noted:

- 104.10 Final Cleaning Up
- 104.14 Contractor's Responsibility for Work
- 106.08 Storage of Materials
- 107.01 Laws To Be Observed
- 107.15 Stormwater Management
- 220.01 – 05 Temporary Erosion, Sedimentation and Stormwater Pollution Prevention and Control

In addition:
ODOT Special Provision 220-1 Management of Erosion Sedimentation, and Stormwater Pollution Prevention and Control.

"ODEQ General Permit (OKR10) for Stormwater Discharges From Construction Activities within the State of Oklahoma," ODEQ, Water Quality Division, September 13, 2007.

REGISTERED PROFESSIONAL ENGINEER LOYD STEPHEN TOLAR 20679 OKLAHOMA 9/23/11

LOWER BIRD CREEK WWTP EXPANSION
TMUA PROJECT NO. ES 2006-01
CONTRACT 1B
GENERAL
CIVIL
STORMWATER MANAGEMENT PLAN
CITY OF TULSA, OKLAHOMA
TULSA METROPOLITAN UTILITY AUTHORITY
ENGINEERING SERVICES DEPARTMENT

PLANS AND ESTIMATES PREPARED BY:
BLACK & VEATCH Building a world of difference. Black & Veatch Corporation Kansas City, Missouri
Mellowy, Upchurch and Endicott Consulting Engineers Muskogee · Broken Arrow
DWGATES Engineering Services

REVISION	BY	DATE

PLAN SCALE: NONE	DRAWN	PGM	APPROVED:
	DESIGNED	LST	
	SURVEY		
PROFILE SCALE:	FIELD MGR.	TDB 10/11	
HORIZONTAL:	SECT. MGR.		
	PROJ. MGR.	CBV 10/3/11	
VERTICAL:	RECOMMENDED: HAS 10/28/11		DIRECTOR
FILE:	DRAWING: SC-4		DATE: 10/28/2011
ATLAS PAGE NO: ---			SHEET 42 OF 261 SHEETS

B&V PROJECT NO. 145120

JGB 9-28-11

Z:\Projects\06TULSO3WWTP – Tulsa LBC WWTP\DWG\Contract 1B\LBCWWTP Expansion\Production\SC-4 Stormwater Mangagement Plan.dwg, 9/22/2011 11:42:38 AM

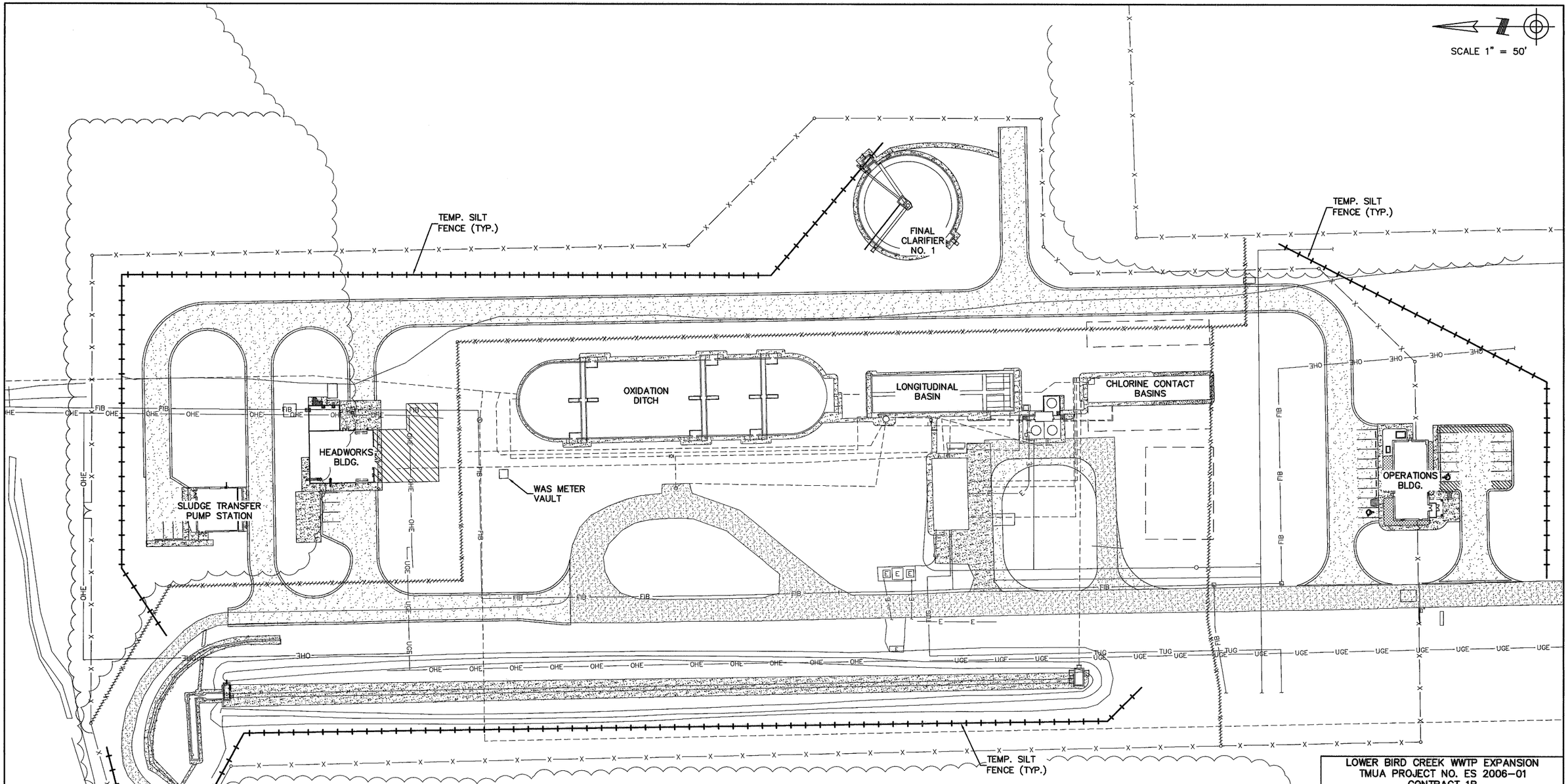

LOWER BIRD CREEK WWTP EXPANSION
TMUA PROJECT NO. ES 2006-01
CONTRACT 1B

GENERAL
CIVIL
STORMWATER MANAGEMENT PLAN DETAIL

CITY OF TULSA, OKLAHOMA
TULSA METROPOLITAN UTILITY AUTHORITY
ENGINEERING SERVICES DEPARTMENT

REGISTERED PROFESSIONAL ENGINEER LOYD STEPHEN TOLAR 20679 OKLAHOMA 9/23/11

PLANS AND ESTIMATES PREPARED BY:
BLACK & VEATCH Building a world of difference — Black & Veatch Corporation, Kansas City, Missouri
Holloway, Hudson and Bolton — Consulting Engineers, Muskogee · Broken Arrow
DWGATES — Consulting Engineers

REVISION	BY	DATE

PLAN SCALE: 1"=50'	DRAWN	PGM		APPROVED:
	DESIGNED	LST		
	SURVEY			
PROFILE SCALE:	FIELD MGR.	TGB	10/11	
HORIZONTAL:	SECT. MGR.			
	PROJ. MGR.	RBW	10/5/11	
VERTICAL:	RECOMMENDED:	LAS	10/28/11	DIRECTOR
FILE:	DRAWING: SC-5			DATE: 10/28/2011
ATLAS PAGE NO: ---				SHEET 43 OF 261 SHEETS

B&V PROJECT NO. 145120

LBB 9-28-11

Z:\Projects\06TULSO3WWTP - Tulsa LBC WWTP\DWG\Contract 1B\LBCWWTP Expansion\Production\SC-5 SSWP.dwg, 9/22/2011 11:43:38 AM

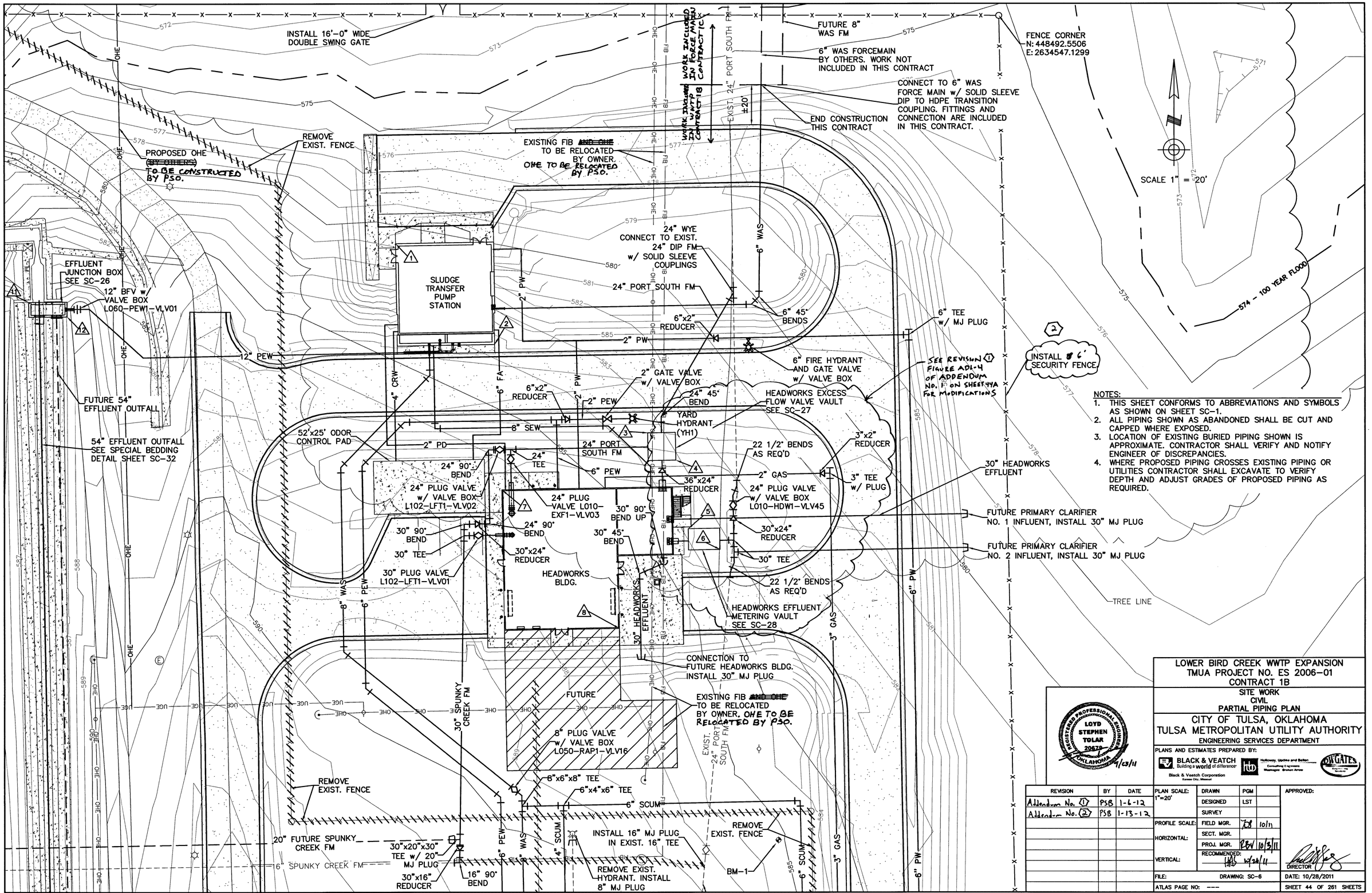

NOTES:
1. THIS SHEET CONFORMS TO ABBREVIATIONS AND SYMBOLS AS SHOWN ON SHEET SC-1.
2. ALL PIPING SHOWN AS ABANDONED SHALL BE CUT AND CAPPED WHERE EXPOSED.
3. LOCATION OF EXISTING BURIED PIPING SHOWN IS APPROXIMATE. CONTRACTOR SHALL VERIFY AND NOTIFY ENGINEER OF DISCREPANCIES.
4. WHERE PROPOSED PIPING CROSSES EXISTING PIPING OR UTILITIES CONTRACTOR SHALL EXCAVATE TO VERIFY DEPTH AND ADJUST GRADES OF PROPOSED PIPING AS REQUIRED.

LOWER BIRD CREEK WWTP EXPANSION
TMUA PROJECT NO. ES 2006-01
CONTRACT 1B

SITE WORK
CIVIL
PARTIAL PIPING PLAN

CITY OF TULSA, OKLAHOMA
TULSA METROPOLITAN UTILITY AUTHORITY
ENGINEERING SERVICES DEPARTMENT

REGISTERED PROFESSIONAL ENGINEER LOYD STEPHEN TOLAR 20679 OKLAHOMA 9/23/11

PLANS AND ESTIMATES PREPARED BY:
BLACK & VEATCH Building a world of difference. Black & Veatch Corporation Kansas City, Missouri
Holloway, Updike and Belton Consulting Engineers Washington Broken Arrow
OWGATES

REVISION	BY	DATE
Addendum No. 1	PSB	1-6-12
Addendum No. 2	PSB	1-13-12

PLAN SCALE: 1"=20'	DRAWN	PGM	
	DESIGNED	LST	
	SURVEY		
PROFILE SCALE:	FIELD MGR.	TJB	10/11
HORIZONTAL:	SECT. MGR.		
	PROJ. MGR.	PBV	10/3/11
VERTICAL:	RECOMMENDED:	HAS	10/28/11

APPROVED: DIRECTOR

FILE: DRAWING: SC-6 DATE: 10/28/2011
ATLAS PAGE NO: --- SHEET 44 OF 261 SHEETS
B&V PROJECT NO. 145120

9-28-11

Z:\Projects\06TULSO3WWTP - Tulsa LBC WWTP\DWG\Contract 1B\LBCWWTP Expansion\Production\Civil Sitework Plan.dwg, 9/22/2011 11:58:44 AM

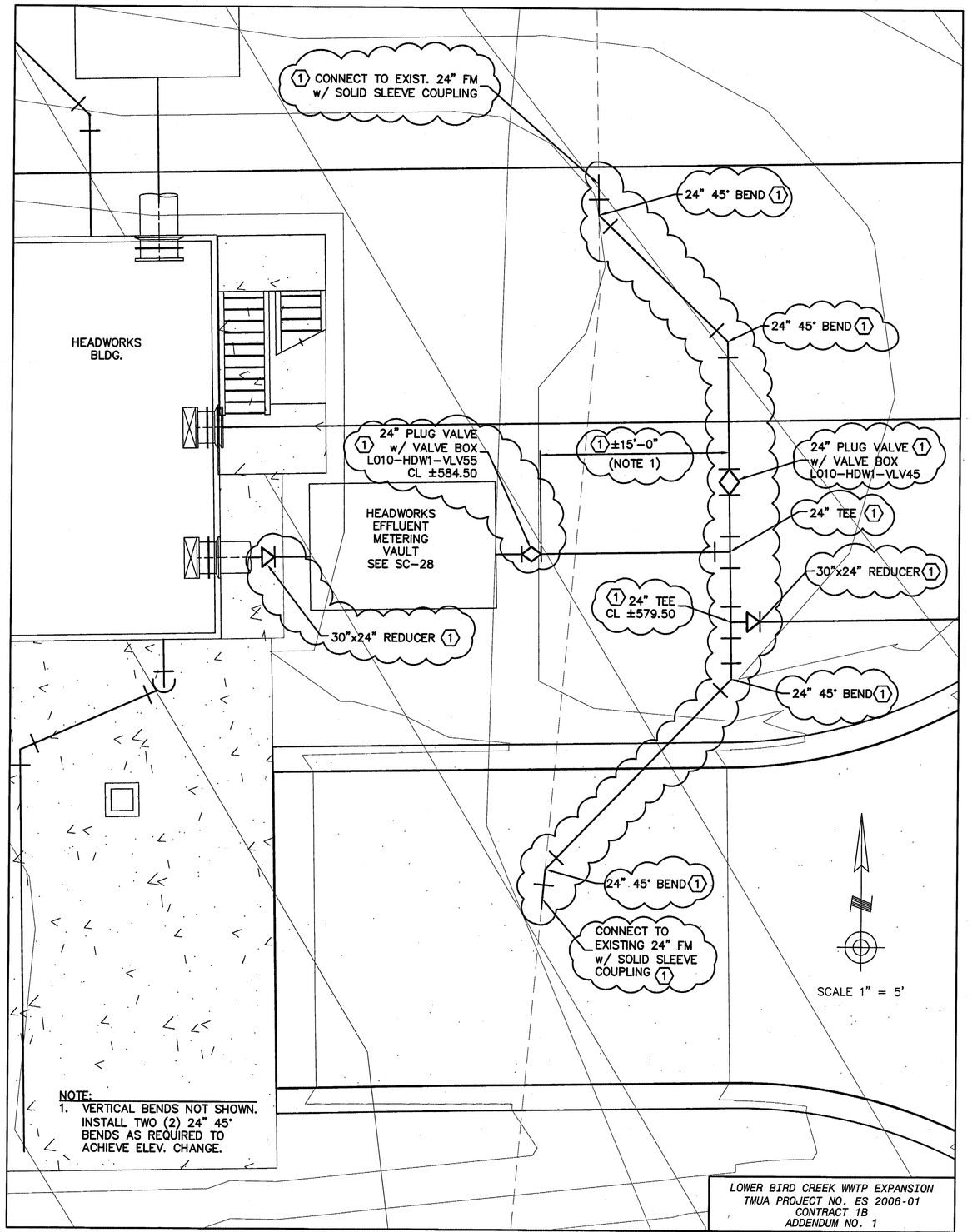

REFERENCE DRAWING SC-6

FIGURE AD1-4

LOWER BIRD CREEK WWTP EXPANSION
TMUA PROJECT NO. ES 2006-01
CONTRACT 1B

SITE WORK
CIVIL
REVISION FIGURE AD1-4

CITY OF TULSA, OKLAHOMA
TULSA METROPOLITAN UTILITY AUTHORITY
ENGINEERING SERVICES DEPARTMENT

REGISTERED PROFESSIONAL ENGINEER LOYD STEPHEN TOLAR 20670 OKLAHOMA 11/23/11

PLANS AND ESTIMATES PREPARED BY:
BLACK & VEATCH Building a world of difference. Black & Veatch Corporation Kansas City, Missouri
Holloway, Updike and Bellen Consulting Engineers Muskogee • Broken Arrow
DW GATES Engineering Services

REVISION	BY	DATE
ADDENDUM NO. 1	PSB	1-6-12

PLAN SCALE: 1"=5'	DRAWN	PGM	
	DESIGNED	LST	
	SURVEY		
PROFILE SCALE:	FIELD MGR.		
HORIZONTAL:	SECT. MGR.		
	PROJ. MGR.		
VERTICAL:	RECOMMENDED:		

APPROVED:

DIRECTOR

FILE: DRAWING: SC-6A

DATE: 10/28/2011

ATLAS PAGE NO: ---

SHEET 44A OF 261 SHEETS

B&V PROJECT NO. 145120

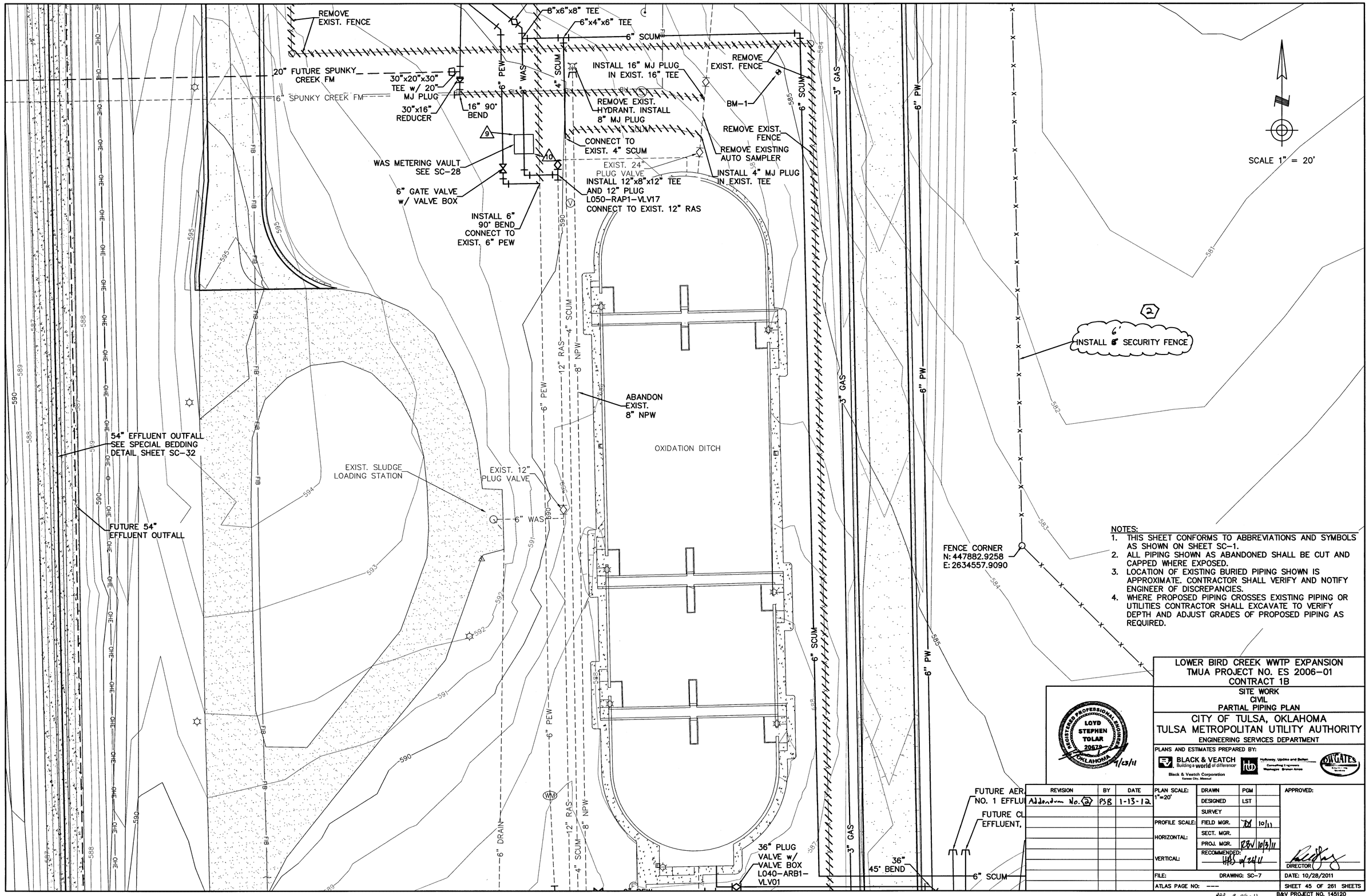

NOTES:

1. THIS SHEET CONFORMS TO ABBREVIATIONS AND SYMBOLS AS SHOWN ON SHEET SC-1.
2. ALL PIPING SHOWN AS ABANDONED SHALL BE CUT AND CAPPED WHERE EXPOSED.
3. LOCATION OF EXISTING BURIED PIPING SHOWN IS APPROXIMATE. CONTRACTOR SHALL VERIFY AND NOTIFY ENGINEER OF DISCREPANCIES.
4. WHERE PROPOSED PIPING CROSSES EXISTING PIPING OR UTILITIES CONTRACTOR SHALL EXCAVATE TO VERIFY DEPTH AND ADJUST GRADES OF PROPOSED PIPING AS REQUIRED.

LOWER BIRD CREEK WWTP EXPANSION
TMUA PROJECT NO. ES 2006-01
CONTRACT 1B

SITE WORK
CIVIL
PARTIAL PIPING PLAN

CITY OF TULSA, OKLAHOMA
TULSA METROPOLITAN UTILITY AUTHORITY
ENGINEERING SERVICES DEPARTMENT

REGISTERED PROFESSIONAL ENGINEER LOYD STEPHEN TOLAR 20670 OKLAHOMA 9/23/11

PLANS AND ESTIMATES PREPARED BY:
BLACK & VEATCH Building a world of difference. Black & Veatch Corporation Kansas City, Missouri
Holloway, Updike and Bellah Consulting Engineers Washington Broken Arrow
OWGATES

REVISION	BY	DATE
Addendum No. 2	PSB	1-13-12

PLAN SCALE: 1"=20'	DRAWN	PGM	
	DESIGNED	LST	
	SURVEY		
PROFILE SCALE:	FIELD MGR.		10/11
HORIZONTAL:	SECT. MGR.		
	PROJ. MGR.	RBV	10/3/11
VERTICAL:	RECOMMENDED:		10/24/11

APPROVED:
DIRECTOR

FILE: DRAWING: SC-7 DATE: 10/28/2011
ATLAS PAGE NO: --- SHEET 45 OF 261 SHEETS
B&V PROJECT NO. 145120

PSB 9-28-11

Z:\Projects\06TULS03WWTP - Tulsa LBC WWTP\DWG\Contract 1B\LBCWWTP Expansion\Production\Civil Sitework Plan.dwg, 9/22/2011 11:59:22 AM

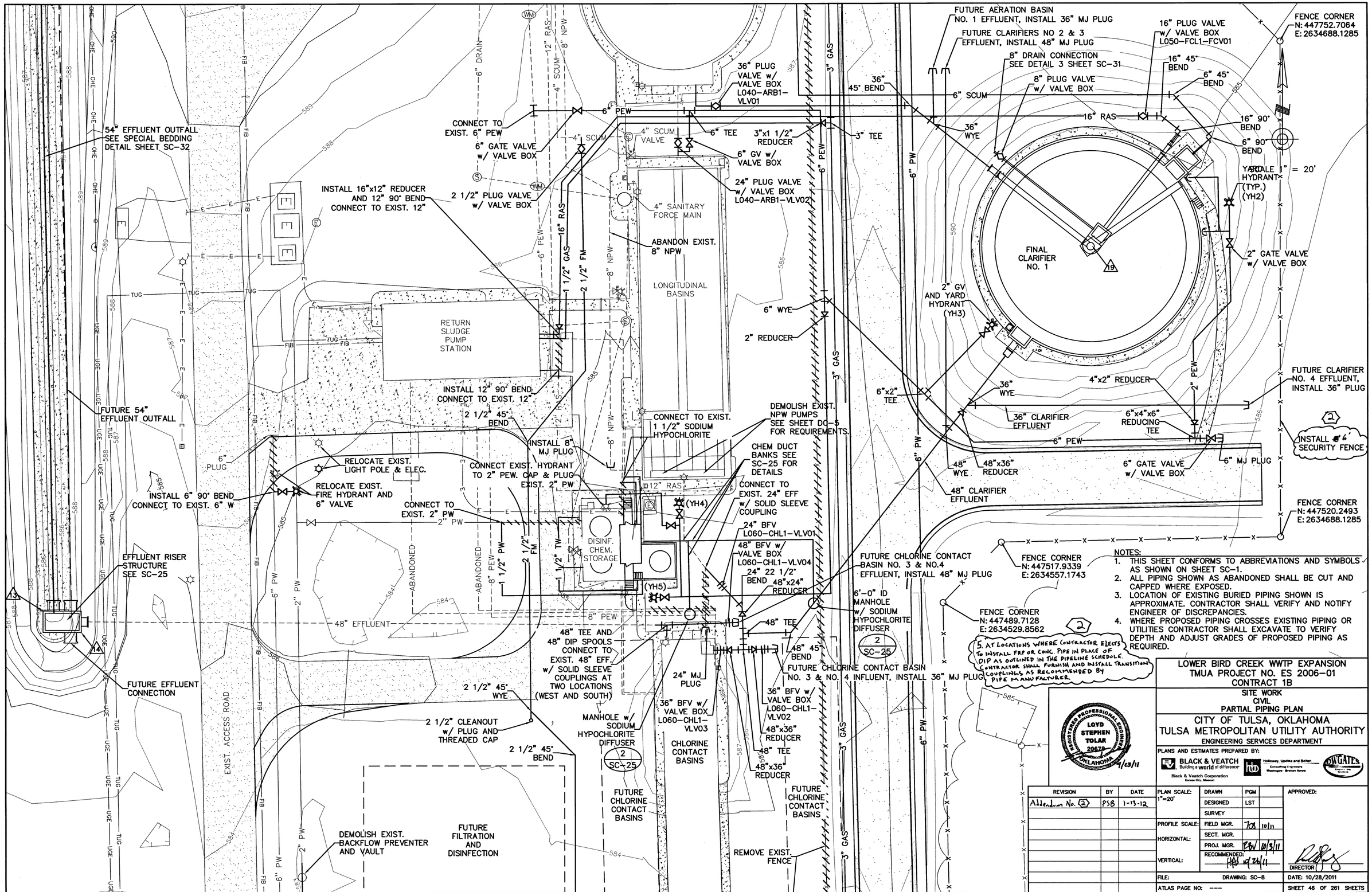

NOTES:

1. THIS SHEET CONFORMS TO ABBREVIATIONS AND SYMBOLS AS SHOWN ON SHEET SC-1.
2. ALL PIPING SHOWN AS ABANDONED SHALL BE CUT AND CAPPED WHERE EXPOSED.
3. LOCATION OF EXISTING BURIED PIPING SHOWN IS APPROXIMATE. CONTRACTOR SHALL VERIFY AND NOTIFY ENGINEER OF DISCREPANCIES.
4. WHERE PROPOSED PIPING CROSSES EXISTING PIPING OR UTILITIES CONTRACTOR SHALL EXCAVATE TO VERIFY DEPTH AND ADJUST GRADES OF PROPOSED PIPING AS REQUIRED.
5. AT LOCATIONS WHERE CONTRACTOR ELECTS TO INSTALL FRP OR CONC. PIPE IN PLACE OF DIP AS OUTLINED IN THE PIPELINE SCHEDULE. CONTRACTOR SHALL FURNISH AND INSTALL TRANSITION COUPLINGS AS RECOMMENDED BY PIPE MANUFACTURER. (2)

LOWER BIRD CREEK WWTP EXPANSION
TMUA PROJECT NO. ES 2006-01
CONTRACT 1B

SITE WORK
CIVIL
PARTIAL PIPING PLAN

CITY OF TULSA, OKLAHOMA
TULSA METROPOLITAN UTILITY AUTHORITY
ENGINEERING SERVICES DEPARTMENT

PLANS AND ESTIMATES PREPARED BY:
BLACK & VEATCH Building a world of difference. Black & Veatch Corporation Kansas City, Missouri
Holloway, Updike and Belton Consulting Engineers Washington Broken Arrow
DWGATES

REGISTERED PROFESSIONAL ENGINEER LOYD STEPHEN TOLAR 20679 OKLAHOMA 9/23/11

REVISION	BY	DATE
Addendum No. (2)	PSB	1-13-12

PLAN SCALE: 1"=20'	DRAWN	PGM	
	DESIGNED	LST	
	SURVEY		
PROFILE SCALE:	FIELD MGR.	TOB	10/11
HORIZONTAL:	SECT. MGR.		
	PROJ. MGR.	PGW	10/3/11
VERTICAL:	RECOMMENDED:	PGW	10/26/11

APPROVED:
DIRECTOR

FILE: DRAWING: SC-8
DATE: 10/28/2011
ATLAS PAGE NO: ---
SHEET 46 OF 261 SHEETS
B&V PROJECT NO. 145120

9-28-11

Z:\Projects\06TULSO3WWTP - Tulsa LBC WWTP\DWG\Contract 1B\LBCWWTP Expansion\Production\Civil Sitework Plan.dwg, 9/22/2011 12:00:36 PM

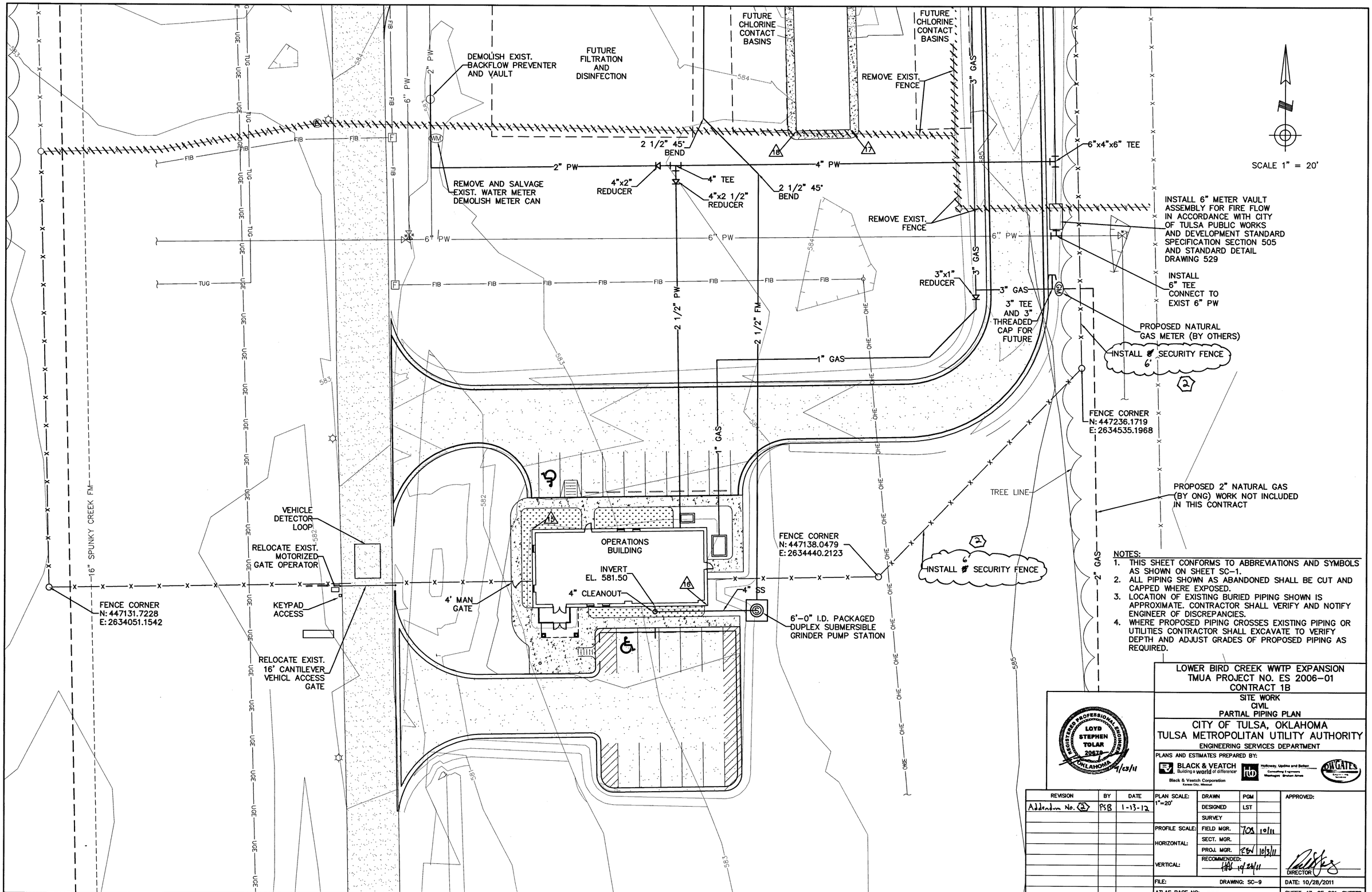

NOTES:

1. THIS SHEET CONFORMS TO ABBREVIATIONS AND SYMBOLS AS SHOWN ON SHEET SC-1.
2. ALL PIPING SHOWN AS ABANDONED SHALL BE CUT AND CAPPED WHERE EXPOSED.
3. LOCATION OF EXISTING BURIED PIPING SHOWN IS APPROXIMATE. CONTRACTOR SHALL VERIFY AND NOTIFY ENGINEER OF DISCREPANCIES.
4. WHERE PROPOSED PIPING CROSSES EXISTING PIPING OR UTILITIES CONTRACTOR SHALL EXCAVATE TO VERIFY DEPTH AND ADJUST GRADES OF PROPOSED PIPING AS REQUIRED.

REGISTERED PROFESSIONAL ENGINEER LOYD STEPHEN TOLAR 20670 OKLAHOMA 9/23/11

LOWER BIRD CREEK WWTP EXPANSION
TMUA PROJECT NO. ES 2006-01
CONTRACT 1B

SITE WORK
CIVIL
PARTIAL PIPING PLAN

CITY OF TULSA, OKLAHOMA
TULSA METROPOLITAN UTILITY AUTHORITY
ENGINEERING SERVICES DEPARTMENT

PLANS AND ESTIMATES PREPARED BY:
BLACK & VEATCH Building a world of difference
Black & Veatch Corporation Kansas City, Missouri
Holloway, Updike and Behan Consulting Engineers Washington Broken Arrow
OH GATES

REVISION	BY	DATE
Addendum No. 2	PSB	1-13-12

PLAN SCALE: 1"=20'	DRAWN	PGM		APPROVED:
	DESIGNED	LST		
	SURVEY			
PROFILE SCALE:	FIELD MGR.	TOS	10/11	
HORIZONTAL:	SECT. MGR.			
	PROJ. MGR.	EBV	10/3/11	
VERTICAL:	RECOMMENDED: HAC 10/28/11			DIRECTOR
FILE:	DRAWING: SC-9			DATE: 10/28/2011
ATLAS PAGE NO: ---				SHEET 47 OF 261 SHEETS

B&V PROJECT NO. 145120

9-28-11

Z:\Projects\06TULS03WWTP - Tulsa LBC WWTP\DWG\Contract 1B\LBCWWTP Expansion\Production\Civil Sitework Plan.dwg, 9/22/2011 12:01:13 PM

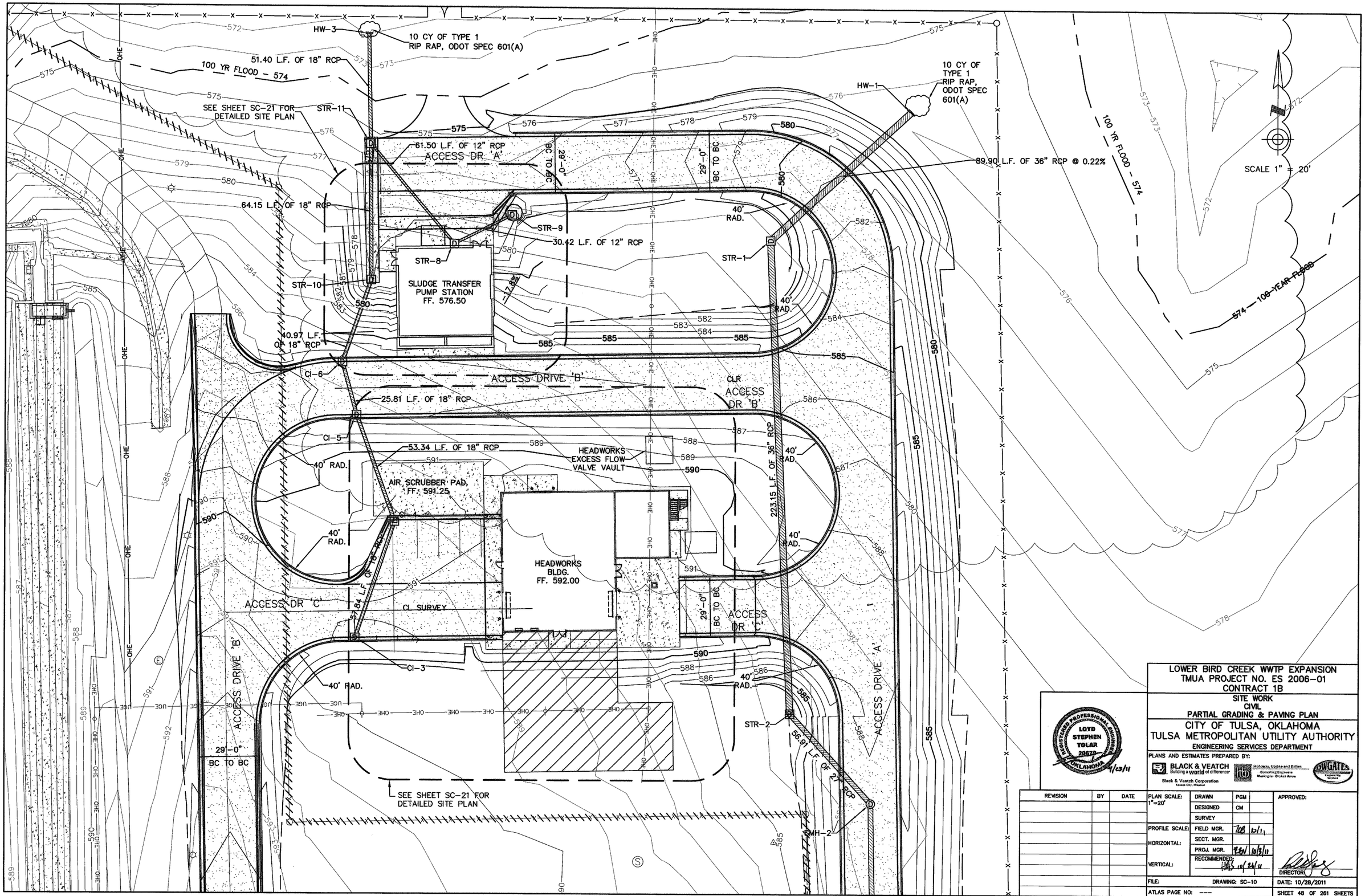

LOWER BIRD CREEK WWTP EXPANSION
TMUA PROJECT NO. ES 2006-01
CONTRACT 1B

SITE WORK
CIVIL
PARTIAL GRADING & PAVING PLAN

CITY OF TULSA, OKLAHOMA
TULSA METROPOLITAN UTILITY AUTHORITY
ENGINEERING SERVICES DEPARTMENT

PLANS AND ESTIMATES PREPARED BY:
BLACK & VEATCH Building a world of difference. Black & Veatch Corporation Kansas City, Missouri
Holloway, Updike and Bolton Consulting Engineers Muskogee - Broken Arrow
DWGATES Consulting Engineers Norman

REGISTERED PROFESSIONAL ENGINEER LOYD STEPHEN TOLAR 20670 OKLAHOMA 9/23/11

REVISION	BY	DATE

PLAN SCALE: 1"=20'	DRAWN	PGM	
	DESIGNED	CM	
	SURVEY		
PROFILE SCALE:	FIELD MGR.	TDB	10/1/11
HORIZONTAL:	SECT. MGR.		
	PROJ. MGR.	BAV	10/3/11
VERTICAL:	RECOMMENDED:		10/24/11

APPROVED: DIRECTOR

FILE: DRAWING: SC-10 DATE: 10/28/2011

ATLAS PAGE NO: ---- SHEET 48 OF 261 SHEETS

B&V PROJECT NO. 145120

JBB 9-28-11

Z:\Projects\061ULS03WWTP - Tulsa LBC WWTP\DWG\Contract 1B\LBCWWTP Expansion\Production\Grading P-P.dwg, 9/22/2011 12:40:50 PM

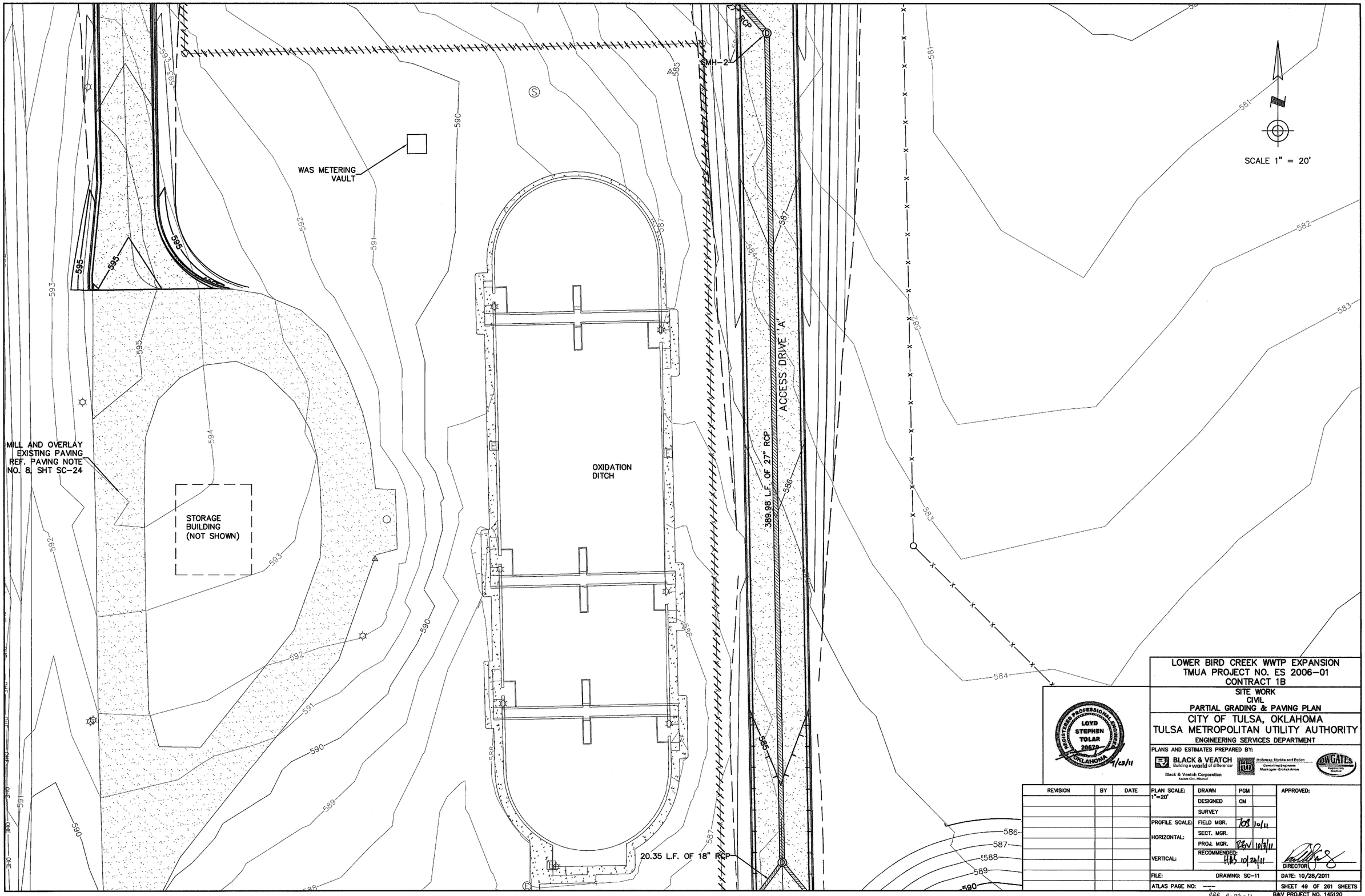

LOWER BIRD CREEK WWTP EXPANSION
TMUA PROJECT NO. ES 2006-01
CONTRACT 1B

SITE WORK
CIVIL
PARTIAL GRADING & PAVING PLAN

CITY OF TULSA, OKLAHOMA
TULSA METROPOLITAN UTILITY AUTHORITY
ENGINEERING SERVICES DEPARTMENT

REGISTERED PROFESSIONAL ENGINEER LOYD STEPHEN TOLAR 20670 OKLAHOMA 9/23/11

PLANS AND ESTIMATES PREPARED BY:
BLACK & VEATCH Building a world of difference
Black & Veatch Corporation Kansas City, Missouri
Holloway, Updike and Dollar Consulting Engineers Muskogee - Broken Arrow
OWGATES Engineering Services

REVISION	BY	DATE

PLAN SCALE: 1"=20'	DRAWN	PGM	
	DESIGNED	CM	
	SURVEY		
PROFILE SCALE:	FIELD MGR.	TOB	10/11
HORIZONTAL:	SECT. MGR.		
	PROJ. MGR.	RSV	10/31/11
VERTICAL:	RECOMMENDED:	HBS	10/28/11

APPROVED: DIRECTOR

FILE: DRAWING: SC-11 DATE: 10/28/2011

ATLAS PAGE NO: --- SHEET 49 OF 261 SHEETS

B&V PROJECT NO. 145120

JBB 9-28-11

Z:\Projects\06TULSO3WWTP - Tulsa LBC WWTP\DWG\Contract 1B\LBCWWTP Expansion\Production\Grading P-F.dwg, 9/22/2011 12:39:50 PM

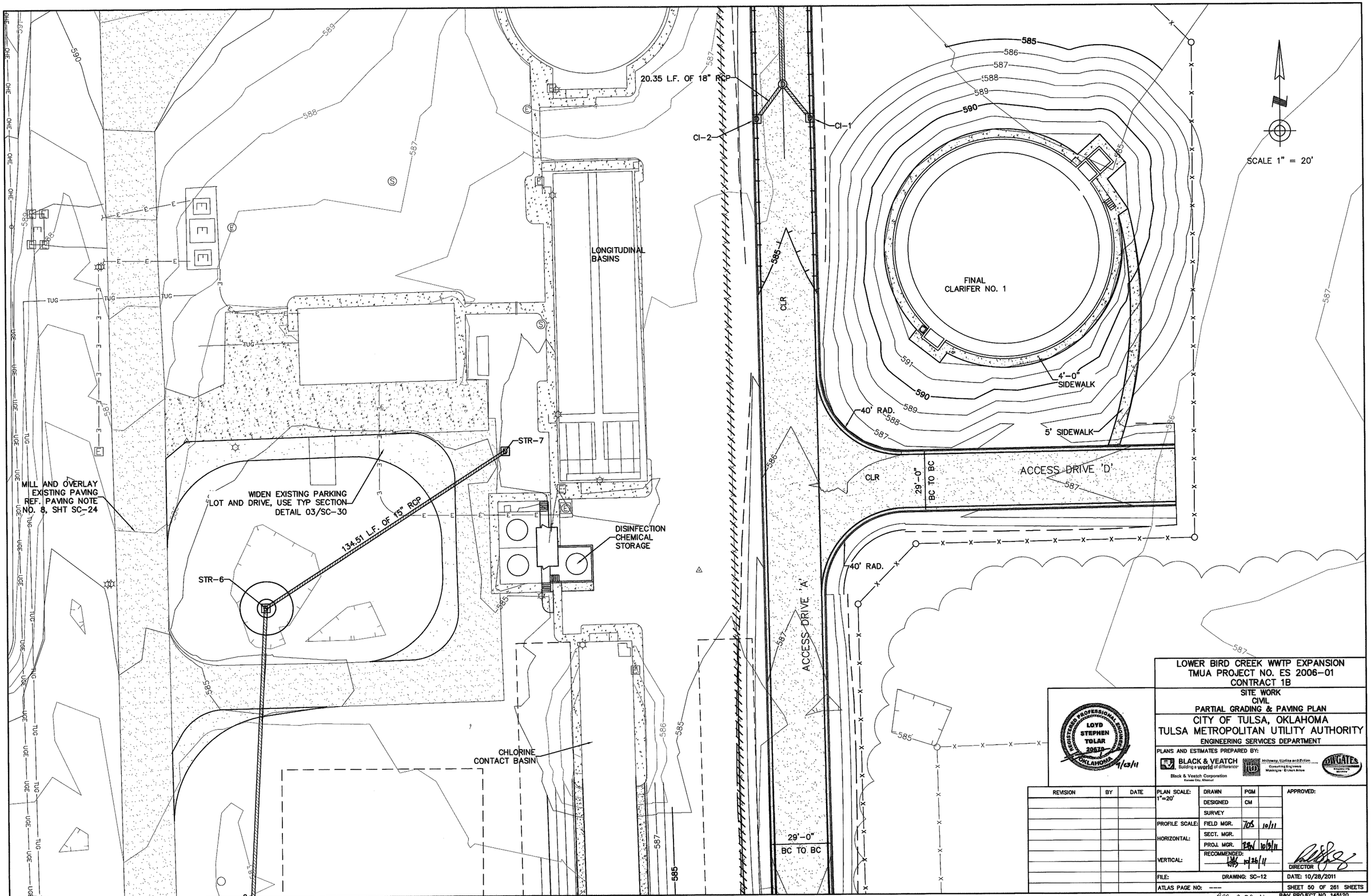

LOWER BIRD CREEK WWTP EXPANSION
TMUA PROJECT NO. ES 2006-01
CONTRACT 1B

SITE WORK
CIVIL
PARTIAL GRADING & PAVING PLAN

CITY OF TULSA, OKLAHOMA
TULSA METROPOLITAN UTILITY AUTHORITY
ENGINEERING SERVICES DEPARTMENT

REGISTERED PROFESSIONAL ENGINEER LOYD STEPHEN TOLAR 20670 OKLAHOMA 9/23/11

PLANS AND ESTIMATES PREPARED BY:
BLACK & VEATCH Building a world of difference. Black & Veatch Corporation Kansas City, Missouri
Holloway, Tomlins and Dalton Consulting Engineers Muskogee · Broken Arrow
DWGATES Engineering Services

REVISION	BY	DATE

PLAN SCALE: 1"=20'	DRAWN	PGM	
	DESIGNED	CM	
	SURVEY		
PROFILE SCALE:	FIELD MGR.	TOS	10/11
HORIZONTAL:	SECT. MGR.		
	PROJ. MGR.	PGM	10/9/11
VERTICAL:	RECOMMENDED:	MJB	10/26/11
FILE:	DRAWING: SC-12		
ATLAS PAGE NO: ---			

APPROVED:
DIRECTOR
DATE: 10/28/2011
SHEET 50 OF 261 SHEETS
B&V PROJECT NO. 145120

908 9-28-11

Z:\Projects\06TULS03WWTP - Tulsa LBC WWTP\DWG\Contract 1B\LBCWWTP Expansion\Production\Grading P-P.dwg, 9/22/2011 1:16:55 PM